ROLLON®

Linear Evolution

Telescopic Line

General catalogue

English

www.rollon.com

We Design and produce in order to support you

An international group for technology, a local support for service

Over 40 years of know how in design and production

Values

Collaboration

High level technical consulting

Cross competences in several industrial sectors for an effective problem-solving

Solutions

From a full range of standard products to fit-to-customer solutions for best perfomances

Applications

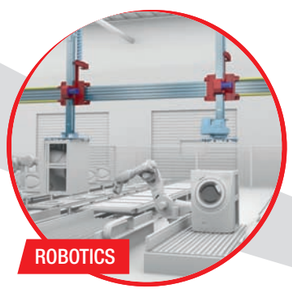

ROBOTICS

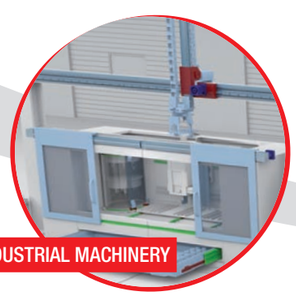

INDUSTRIAL MACHINERY

LOGISTICS

RAILWAY

AERONAUTICS

SPECIAL VEHICLES

MEDICAL

INTERIORS AND ARCHITECTURE

An extensive product portfolio for linear and non-linear movements for all requirements

Linear and curved guides with ball and roller bearings, with tempered tracks, high load capacities, self-alignment and capable of working in dirty environments.

Linear Line

Telescopic guides with ball bearings
Extracts with hardened and unhardened raceways, high load capacities, and low bending, resistant to shocks and vibrations. For partial, total or extended extraction up to 200% of the length of the guide.

Telescopic Line

A global provider of solutions for applications for linear motion

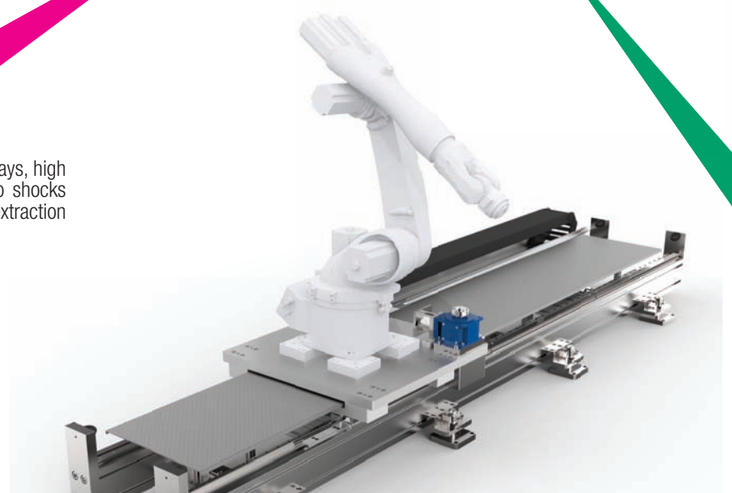

Actuator Line

Linear actuators with different guide configurations and drives.
Available with belt, screw or rack and pinion drives for different needs: precision, speed and guide bearing or ball recirculating systems for different load capacities and critical environments.

Actuator System Line

Integrated actuators for industrial automation.
They find applications in numerous industrial sectors: from machinery servo systems to high precision assembly systems, packaging lines and high speed production lines. It has evolved from Actuator Line series in order to meet the most demanding needs of our customers.

Content

Telescopic Rail

Technical features overview

1 Product explanation
Telescopic Rail: Seven models with full and partial extension TR-2

2 Product cross sections TR-5

3 Technical data
Performance characteristics and notes TR-7

4 Dimensions and load capacity
ASN TR-8
DSS TR-12
DSS...S TR-14
DSB TR-16
DSD TR-17
DSE TR-19
DSC TR-21
DE TR-23
DE...S TR-26
DE...D TR-28
DE...Z TR-30
DBN TR-32
DMS TR-34
DRT TR-36

5 Technical instructions
Telescopic rail selection, Static load check TR-38
Deflection TR-39
Static load TR-40
Service life TR-41
Speed, Extension and extraction force,
Double-sided stroke, Temperature TR-44
Anticorrosive protection, Lubrication, Clearance and preload TR-45
Fixing screws TR-46
Installation instructions TR-47

Ordering key
Ordering key with explanations TR-49

Hegra Rail

1 Product explanation HR-2

2 Product cross sections HR-4

3 Technical data
Performance characteristics and notes HR-9

4 Load capacities and dimensions
HTT HR-10
HTC HR-18
HVB HR-23
HVD HR-25
HVC HR-31
HVT HR-36
H1D HR-40
H1C HR-44
H1T HR-46
H2H HR-50
LTH HR-52
HGT HR-59
LTF HR-63
HGS HR-65

5 Accessories
Locking, driving disc, damping HR-68

6 Technical information
Selecting a suitable telescoping rail, Mounting tolerances,
Life cycle, Load capacity, HR-70
Deflection, Operating temperature, Corrosion protection,
Ball cage displacement, Moving force, Lubrication, HR-71
Maintenance intervals, Assembly information HR-72

Ordering key
Ordering key with explanations HR-73

Light Rail

1 Product explanation
Light telescopic rails, with full or partial extension LR-2

2 Product cross sections LR-4

3 Technical data
Performance characteristics and notes LR-5

4 Dimensions and load capacity
LPS LR-6
LFS LR-7
LFS LR-8
LFS SC LR-9
LFS LR-10
LFX LR-11
DRX/DRS,
Fixing screws LR-12

5 Technical instructions
Load capacities LR-13
Speed, Temperature, Lubrication, Corrosion protection LR-14
Installation instructions, DRX/DRS installation LR-15

Ordering key
Ordering key with explanations LR-16

Guides suitable for all applications

Technical features overview

Reference			Product name	Extraction	Size	Profile		Self alignment	Slider		Material			Stroke direction		Snap	Locking closed position	Damping closed position	Max. load capacity per pair [N]		Max. rail length [mm]	Max. stroke [mm]	Max. extension speed* [m/s]	Rigidity (deflection)	Operating temperature [°C]
Product category	Product	Section				Type	Hardened raceways		Balls	Rollers	Steel	X	A	B	BM				C_{0rad}	C_{0ax}					
Telescopic Rail	ASN		ASN22	50%	22	Cold Draw	■	+	■		■			■					5934	4154	770	394	0,8	+++	-20°C/+170°C
			ASN28		28									■					15736	11014	1170	601	0,8		
			ASN35		35									■					26520	18564	1490	759	0,8		
			ASN43		43									■					48596	34018	1970	1013	0,8		
			ASN63		63									■					88494	61946	1970	1013	0,8		
	DE		DE...22	100%	22	Cold Draw	■	++	■		■			■					1348	546	770	788	0,8	+++	-20°C/+170°C
			DE...28		28									■					2338	1074	1170	1202	0,8		
			DE...35		35									■					3816	1586	1490	1518	0,8		
			DE...43		43									■					6182	2868	1970	2026	0,8		
			DE...63		63									■					14396	6124	1970	2026	0,8		
			DE...28S		28													■	2100	758	1170	1186	0,8		-20°C/+50°C
			DE...35S		35													■	3540	1574	1490	1510	0,8		
			DE...43S		43													■	5964	2522	1970	2066	0,8		
			DE...28D		28										■				2014	856	1170	1216	0,8		-20°C/+170°C
			DE...35D		35										■				3460	1534	1490	1503	0,8		
			DE...43D		43										■				5784	2484	1970	2011	0,8		
			DE...63D		63										■				15512	6514	1970	1962	0,8		
			DEF43Z		43														7524	3830	1970	1923	0,8		
	DS		DSS28	100%	28	Cold Draw	■	++	■		■							■	4480	-	1490	1518	0,8	++++	-20°C/+80°C
			DSS35		35													■	7016	-	1730	1758	0,8		
			DSS43		43													■	9816	-	1970	2026	0,8		
			DSS63		63													■	25664	-	1970	2026	0,8		
			DSS43S		43													■	10208	-	1970	2026	0,8		-20°C/+50°C
			DSB28		28												■		4480	-	1490	1518	0,8		-20°C/+80°C
			DSB35		35												■		7016	-	1730	1758	0,8		
			DSB43		43												■		9816	-	1970	2026	0,8		
			DSD28		28									■				■	5162	-	1490	1446	0,8		
			DSD35		35									■				■	9736	-	1730	1630	0,8		
			DSD43		43									■				■	11660	-	1970	1916	0,8		
			DSD63		63									■				■	38018	-	1970	1758	0,8		
	DSC		DSC43	100%	43	Cold Draw	■	++	■		■							■	11058	4150	1970	2028	0,8	+++	-20°C/+80°C
	DBN		DBN22	100%	22	Cold Draw	■	++	■		■			■					562	472	770	788	0,8	+	-20°C/+170°C
			DBN28		28									■					1244	1074	1170	1202	0,8		
			DBN35		35									■					1334	1120	1490	1518	0,8		
			DBN43		43									■					2662	2558	1970	2026	0,8		
	DMS		DMS63	100%	63	Cold Draw	■	++	■		■							■	39624	-	2210	2266	0,8	++++	-20°C/+80°C
	DRT		DRT28	100%	28	Cold Draw	■	+	■	■	■							■	1844	-	1170	1202	0,8	+++	-20°C/+80°C
			DRT43		43													■	5720	-	1970	1980	0,8		
	DSE		DSE28	150	28	Cold Draw	■	++	■		■								1702	-	1170	1803	0,8	++++	-20°C/+80°C
			DSE35		35														3182	-	1490	2277	0,8		
			DSE43		43														5012	-	1970	3039	0,8		
			DSE63		63														11344	-	1970	3039	0,8		

The values given are defaults.

* The maximum value is defined by the application. For more information, please contact Rollon.

■ standard

steel
X stainless steel
A aluminum

B stroke in both directions
BM stroke in both directions with driving disc

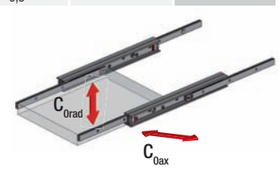

Technical features overview

Reference			Product name	Extraction	Size	Profile		Self alignment	Slider		Material			Stroke direction		Snap			Locking*5			Damping	Max. load capacity per pair [N]		Max. rail length [mm]	Max. stroke [mm]	Max. extension speed [m/s]	Rigidity (deflection)	Operating temperature*6 [°C]
Product category	Product	Section				Type	Hardened raceways		Balls	Rollers	Steel	X*4	A	B	BM	EG	EO	EB	VG	VO	VB	DG	C_{0rad} *3	C_{0ax}					
Hegra Rail	HTT		HTT030	60 % to 66 %	30	Machined		+	●		●	●	●	●		●	●	●				■	1200	70 % C_{0rad}	1000	660	0,8	+++	0 °C to +170 °C
			HTT040		40											●	●	●				■	2550	70 % C_{0rad}	1000	660			
			HTT050		50											●	●	●	●	●	●	■	2900	70 % C_{0rad}	1200	720			
			HTT060		60											●	●	●	●	●	●	●	3400	70 % C_{0rad}	1500	900			
			HTT070		70											●	●	●	●	●	●	●	4200	70 % C_{0rad}	1700	1020			
			HTT080		80											▲	▲	▲	●	●	●	●	5000	70 % C_{0rad}	1700	1020			
			HTT100		100														●	●	●	●	10000	70 % C_{0rad}	2000	1200			
			HTT120		120														●	●	●	●	12000	70 % C_{0rad}	2000	1200			
			HTT150		150														●	●	●	●	15500	70 % C_{0rad}	2000	1200			
	HTC		HTC026	60 % to 66 %	26	Machined & bended sheetmetal		+	●		●	●		●								●	750	60 % C_{0rad}	1000	660	0,8	+++	0 °C to +170 °C
			HTC045		45											●	●	●	●				1300	60 % C_{0rad}	1200	800			
			HTC050		50														□	□	□	●	1800	60 % C_{0rad}	1200	800			
			HTC058		58							●				●	●	●	●	●	●		2500	60 % C_{0rad}	1500	1000			
			HTC075		75														●	●	●		3000	60 % C_{0rad}	1700	1020			
	HVB		HVB026	100 %	26	Machined & bended sheetmetal		++	●		●	●		●		●	●	●					1150	60 % C_{0rad}	1000	1000	0,8	+	0 °C to +170 °C
	HVD		HVD026	100 %	26	Machined & bended sheetmetal		++	●		●	●		●		●	●	●					750	50 % C_{0rad}	1000	1000	0,8	++	0 °C to +170 °C
			HVD045		45																	●	1700	50 % C_{0rad}	1200	1200			
			HVD050		50																	●	1900	50 % C_{0rad}	1500	1500			
			HVD058		58							●										●	2500	50 % C_{0rad}	1500	1500			
			HVD075		75																	●	3700	50 % C_{0rad}	2000	2000			
	HVC		HVC045	100 %	45	Rollgeformt & cold drawn		++	●		●			●		●	●	●				●	1200	50 % C_{0rad}	1200	1200	0,8	+	0 °C to +170 °C
			HVC050		50														●	●	●		1500	50 % C_{0rad}	1500	1500			
			HVC058		58							●			●				●	●	●		2100	50 % C_{0rad}	1500	1500			
			HVC075		75										●				●	●	●		3300	50 % C_{0rad}	2000	2000			
	HVT		HVT060	100 %	60	Machined & Cold drawn		++	●		●	●	●	●		●	●	●	●	●	●		2700	50 % C_{0rad}	1500	1500	0,8	+	0 °C to +170 °C
			HVT080		80											▲	▲	▲	●	●	●	●	4350	50 % C_{0rad}	2000	2000			
			HVT100		100														●		●		5700	50 % C_{0rad}	2000	2000			
	H1D*1		H1D045	150 % to 200 %	45	Machined, cold drawn & bended sheetmetal		++	●		●	●			●							●	650	-	1000	1500	0,5	++	0 °C to +170 °C
			H1D058		58											●	●	●					1900	-	1500	2250			
			H1D075		75																		2600	-	1500	2250			
	H1C*1		H1C075	150%	75			++	●		●			●		●	●	●				●	1350	-	1500	2250	0,5	+	0 °C to +170 °C
	H1T*1		H1T060	150 % to 200 %	60	Machined & Cold drawn		++	●		●	●	●	●		●	●	●				●	2600	-	1500	2250	0,5	++	0 °C to +170 °C
			H1T080		80											●	●	●					3200	-	1500	2250			
			H1T100		100																		5500	-	2000	3000			
			H1T150		150																		7500	-	2000	3000			
	H2H		H2H080	150 % to 200 %	80			++	●		●	●	●			●	●	●				●	5500	-	2000	3000	0,5	++	0 °C to +170 °C
	LTH		LTH30	100 %	30	Cold drawn		++	●		●												1470	on request	1200	1215	0,5	++	-20 °C to +170 °C
			LTH45		45																		3346	on request	1500	1522			
			LTH30S		30																	●	1498	on request	1200	1217			
			LTH45S		45																	●	3084	on request	1500	1522			
	HGT		HGT060	100 %	60	Machined & cold drawn		++	●		●	●	●	●	●	●	●	●					5500	60 % C_{0rad}	1500	1500	0,5	+++	0 °C to +170 °C
			HGT080		80											▲	▲	▲					9350	60 % C_{0rad}	2000	2000			
			HGT100		100																		11000	60 % C_{0rad}	2000	2000			
			HGT120		120														●	●	●	●	11800	60 % C_{0rad}	2000	2000			
			HGT150		150																		13900	60 % C_{0rad}	2000	2000			
			HGT200		200																		17500	60 % C_{0rad}	2300	2300			
			HGT240		250																		20000	60 % C_{0rad}	2000	2000			
	LTF		LTF44	100 %	44	Cold drawn		++	●		●			●									1296	-	1010	1010	0,3	+	-20 °C to +170 °C
	HGS		HGS060	100 %	60	Machined		++	●		●			●		●	●	●					1400	-	1000	1000	0,5	+++	0 °C to +170 °C
			HGS080		80																		2450	-	1000	1000			
			HGS100		100														○				3600	-	1500	1500			

The values given are defaults.
For a complete view of technical data, please consult our catalogs on www.rollon.com
In many cases, special designs or alternative surface coatings are possible. Please contact our technical service.
*1 The over extension corresponds to 150 % stroke (1=150 % extraction). For a 200 % stroke (2=200 % extraction) please contact our technical service.
*2 Different temperature ranges from -30 °C to +250 °C, after consultation with the application technologies.
*3 The load capacity for aluminum is 40 % and for stainless steel 60 % of the stated values, if available in this material variant.
*4 Different stainless steels, such as the «electropolishing» option, are available, please contact our technical service.
*5 The availability of locking systems depends on the system length and varies per product group. Please contact our technical service.
*6 The operating temperature is maximum +50°C if damping is used. Please contact our technical service.
*7 The maximum value is defined by the application. For more information, please contact Rollon.

● feasible
▲ only to length 1000
□ slider is 35x12 EB=18
○ only with locking bolt
■ standard

steel
X stainless steel
A aluminum

B stroke in both directions
BM stroke in both directions with driving disc

EG snap on closed position
EO snap on opened position
EB snap on both positions

VG locking closed position
VO locking opened position
VB locking both positions

DG damping closed position

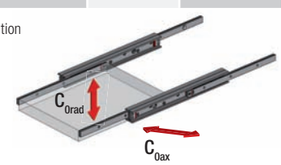

Technical features overview

Reference			Product name	Extraction	Size	Profile		Self alignment	Slider		Material			Stroke direction		Snap closed position	Locking	Damping closed position	Max. load capacity per pair [N]		Max. rail length [mm]	Max. stroke [mm]	Max. extension speed* [m/s]	Rigidity (deflection)	Operating temperature [°C]
Product category	Product	Section				Type	Hardened raceways		Balls	Rollers	Steel	X	A	B	BM				C_{0rad}	C_{0ax}					
Light Rail	LPS		LPS38	50%	38	Formed Sheetmetal		++	■		■								350	100	473	373	0,5	+	+10 °C/+40 °C
	LFS		LFS46	100%	46	Formed Sheetmetal		++	■		■							■	400	100	600	610	0,5	+	+10 °C/+40 °C
			LFS57		57													■	800	160	750	800			
			LFS58		58											■		■	600	-	550	584			
			LFS70		70													■	2000	300	1100	1100			
	LFX		LFX27	100%	27	Formed Sheetmetal		++	■			■							350	50	550	576	0,5	+	-30 °C/+200 °C
	DRX/DRS		DRS30	100%	30	Formed Sheetmetal		++		■	■							■	720	-	1040	1120	0,5	+	-20°C / +100°C
			DRX30		30							■							720	-	1040	1120			

The values given are defaults.

* The maximum value is defined by the application. For more information, please contact Rollon.

■ standard

steel
X stainless steel
A aluminum

B stroke in both directions
BM stroke in both directions with driving disc

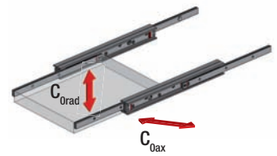

ROLLON®

Linear Evolution

Telescopic Rail

Product explanation

Telescopic Rail: Seven models with full and partial extension

Fig. 1

The Telescopic Rail product line is made up of seven models with full and partial extension and various cross-sections and intermediate elements in S-shape, I-beam or square. High loads in combination with cost-efficiency and free movement have long been the outstanding properties of the Telescopic Rail product line.

The most important characteristics:

- High load capacity with low deflection
- Rigid intermediate elements
- Standardized hole locations
- Zero-play running even with maximum load
- Space saving design
- High reliability

Preferred areas of application of the Telescopic Rail product family:

- Railcars (e. g. maintenance and battery extensions, doors)
- Construction and machine technology (e.g., housings and doors)
- Logistics (e.g., extensions for containers or gripper movements)
- Automotive technology
- Packaging machines
- Beverage industry
- Special machines

ASN

Partially extending telescopic rail consisting of a guide rail and a slider. This compact and simple design allows for very high load capacities. When the guide rail is mounted to a structure a very high rigidity system is created.

Fig. 2

DS

Fully extending telescopic rail consisting of a fixed guide rail, an identical moving guide rail, and an S-shaped intermediate element. This has a high moment of inertia and high rigidity in a slim size. This results in a high loading capacity with low deflection in the extended state.
The DS series is available in three different designs: DSS version with single direction stroke. DSB version with single direction stroke, and locking capability in the extended state, and the DSD version with double direction stroke.
DS…S version available with reinforced and damped stainless steel end stops.

Fig. 3

DSE

Telescopic rail with a 150% extension of it's length, made by four elements. It has a high rigidity, thanks to the intermediate elements with a high moment of inertia, in a streamlined shape.
This results in a high load capacity, with reduced bending even when the telescopic guide is fully extended.

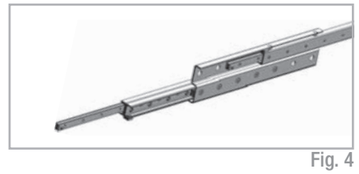

Fig. 4

DSC

Fully extending telescopic rail consisting of a compact and flexurally rigid intermediate element that connects two different sized guide rails with each other as a fixed and moving element.
This design makes it possible to reduce all components to the necessary size and length for achieving the full stroke. The DSC series features high rigidity and a high load capacity in a compact size. This results in an optimal combination of performance and weight reduction.

Fig. 5

DE

Fully extending telescopic rail consisting of two guide rails, which are mounted on an I-beam profile to form the intermediate element, one moveable slider and one fixed slider which mounts onto the structure. The square cross-section allows a compact size with high load capacities and low deflection, especially with radial loading. Also available with a double stroke design, which includes an eccentrically located driving disc for simultaneous movement. For double sided extensions, a dedicated DE...D version is available with a driving disc.

DE…S version available with reinforced and damped stainless steel end stops.

Fig. 6

DBN

Fully extending telescopic rail consisting of two guide rails, one which is fixed to a structure, and one which is moveable, and two sliders which are mounted together and form the intermediate element. The size is similar to the DE series and offers good protection from contamination of the ballcage.

Fig. 7

DMS

Heavy load telescopic consisting of elements from the ASN series and an extremely rigid I-beam profile as the intermediate element. This fully extending telescopic rail is used to accept very heavy loads with low deflection.

Fig. 8

DRT

Fully extending telescopic rail on a roller slide base consisting of the S-shaped intermediate element from the DS series, and elements of the proven Compact Rail roller slider system. The use of roller sliders instead of a linear bearing as the load accepting element, enables a large resistance to contamination and an extremely quiet motion.

Fig. 9

Overview product cross sections

Partial extension guides

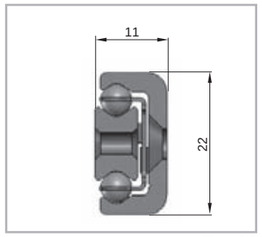

Fig. 10

ASN22

Load capacities p. TR-8

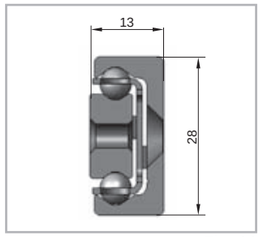

Fig. 11

ASN228

Load capacities p. TR-9

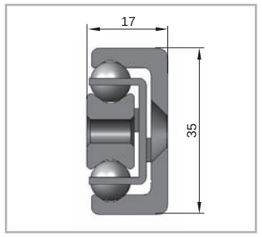

Fig. 12

ASN35

Load capacities p. TR-9

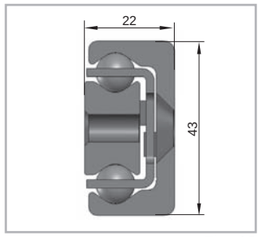

Fig. 13

ASN43

Load capacities p. TR-10

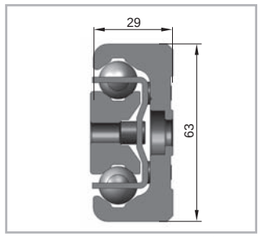

Fig. 14

ASN63

Load capacities p. TR-10

Full extension guides

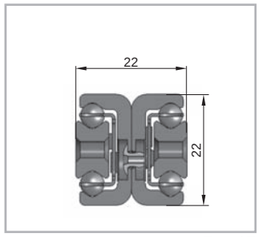

Fig. 15

DE22

Load capacities p. TR-24

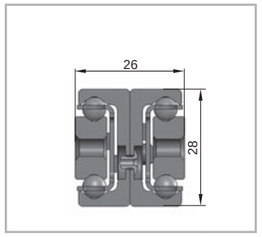

Fig. 16

DE28

Load capacities p. TR-24

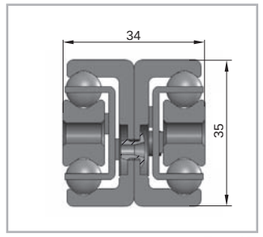

Fig. 17

DE35

Load capacities p. TR-25

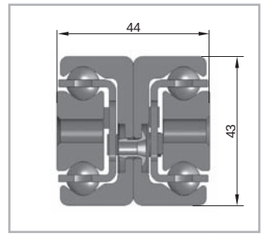

Fig. 18

DE43

Load capacities p. TR-25

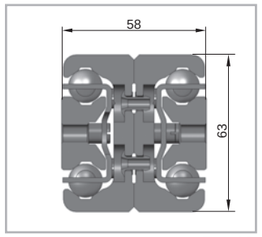

Fig. 19

DEF63

Load capacities p. TR-25

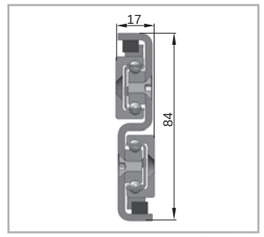

Fig. 20

DSS28

Load capacities p. TR-12

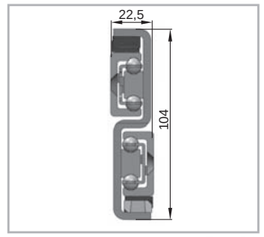

Fig. 21

DSS35

Load capacities p. TR-12

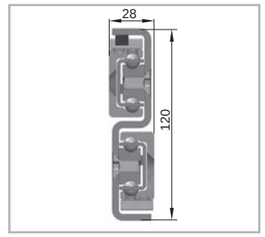

Fig. 22

DSS43

Load capacities p. TR-13

Full extension guides

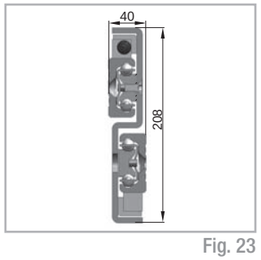

Fig. 23

DSS63

Load capacities p. TR-29

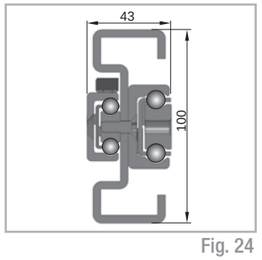

Fig. 24

DSC43

Load capacities p. TR-22

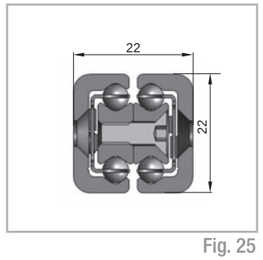

Fig. 25

DBN22

Load capacities p. TR-32

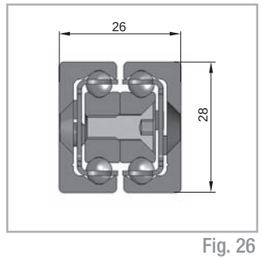

Fig. 26

DBN28

Load capacities p. TR-32

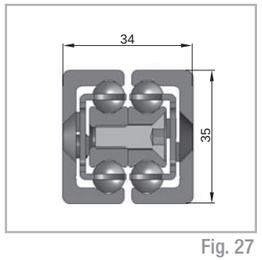

Fig. 27

DBN35

Load capacities p. TR-33

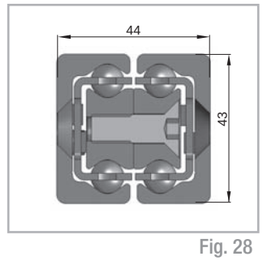

Fig. 28

DBN43

Load capacities p. TR-33

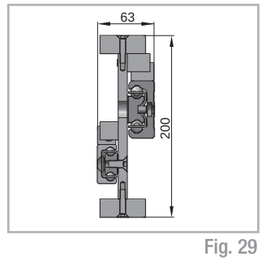

Fig. 29

DMS63

Load capacities p. TR-34

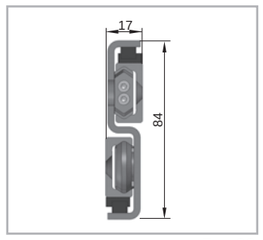

Fig. 30

DRT28

Load capacities p. TR-36

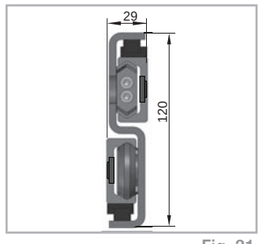

Fig. 31

DRT43

Load capacities p. TR-36

Overextending guides

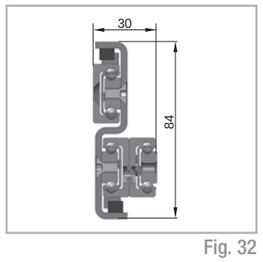

Fig. 32

DSE28

Load capacities p. TR-46

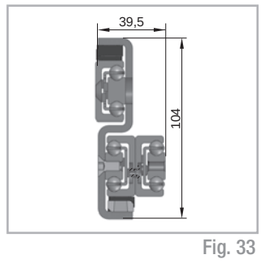

Fig. 33

DSE35

Load capacities p. TR-47

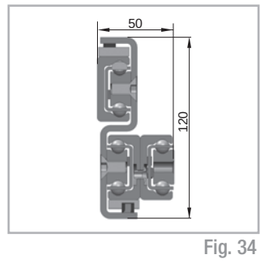

Fig. 34

DSE43

Load capacities p. TR-47

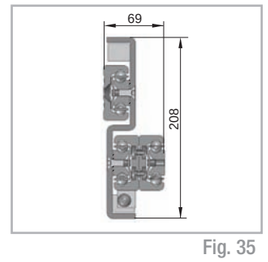

Fig. 35

DSE63

Load capacities p. TR-48

Technical data

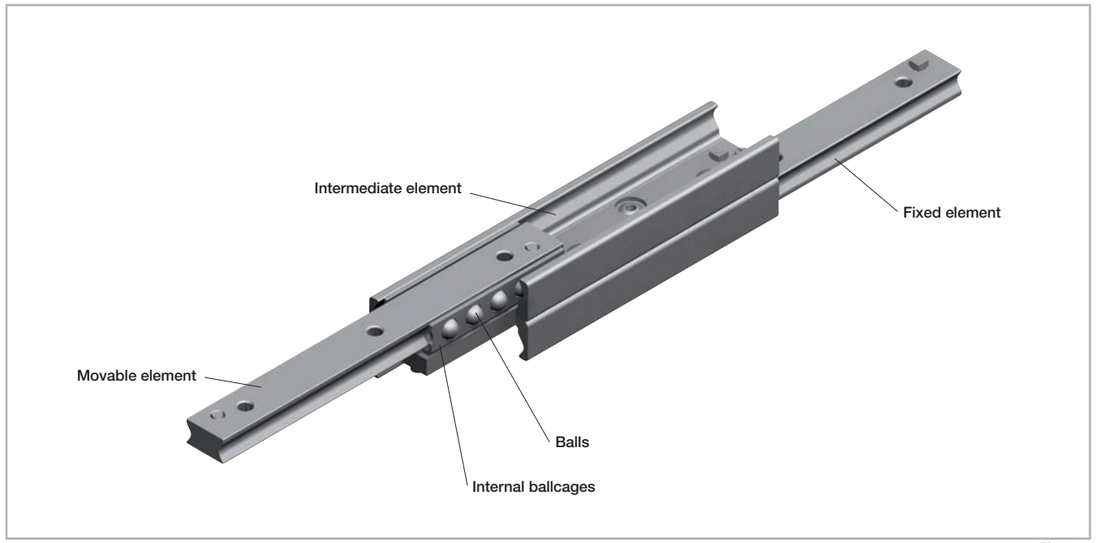

Fig. 36

Performance characteristics:

- Available sizes ASN / DE: 22, 28, 35, 43, 63
- Available sizes DS: 28, 35, 43, 63
- Available sizes DSE: 28, 35, 43, 63
- Available sizes DSC: 43
- Available sizes DBN: 22, 28, 35, 43
- Available size DMS: 63
- Available size DRT: 28, 43
- Induction hardened raceways
- Rails and sliders made of cold-drawn roller bearing carbon steel
- Balls made of hardened roller bearing carbon steel
- Max. operating speed: 0.8 m/s (31.5 in/s) (depending on application)
- DE...S and DSS...S temperature range: -20°C to +50°C (-4°F to +122° F)
- ASN, DE, DBN, temperature range: -20 °C to +170 °C (-4 °F to +338 °F), DS, DSE, DSC, DRT and DMS: -20 °C to +80 °C (-4 °F to +176 °F)
- Electrolytic galvanised as per ISO 2081, increased anticorrosive protection on request (see pg. TR-45 Anticorrosive protection)

Remarks:

- All load capacity data are based on a pair of telescopic rails except the value M_x of ASN series (see pag. TR-8, TR-9, TR-10)
- Horizontal movement installation is recommended
- Vertical movement installation on request
- External end stops are recommended
- Double-sided stroke in ASN, DSD, DE, DBN series (DMS on request)
- Custom strokes on request
- All load capacity data is based on continuous operation
- Calculation of the service life is based exclusively on the loaded rows of balls
- For models DMS, DRT, DSB, and DSE, please observe right or left side use
- DRT 43 must be fixed with Torx® screws (custom design, included in delivery) ASN 63 and DMS 63 can be fixed with Torx® screws as an alternative
- Fixing screws of property class 10.9 must be used for all telescopic rails
- Internal stops are used to stop the unloaded slider and the ball cage. Please use external stops as end stops for a loaded system

Dimensions and load capacity

ASN

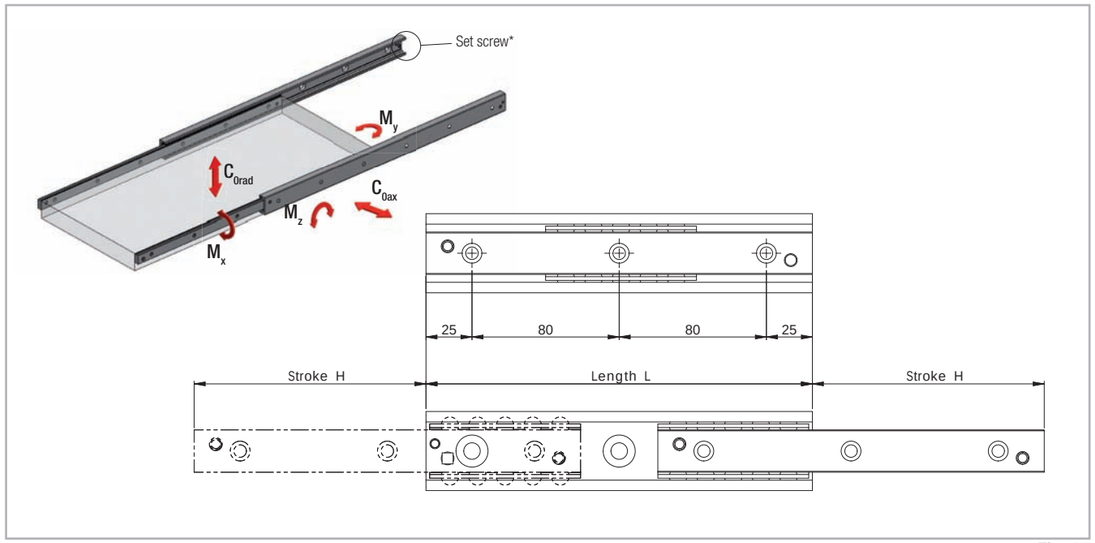

* Remove the set screw to reach all the fixing holes. See also assembly instructions on page TR-47f.

Fig. 37

Type	Size	Length L [mm]	Stroke H [mm]	Load capacity and moments for a pair of rails					No. of holes
				C_{0rad} [N]	C_{0ax} [N]	M_x* [Nm]	M_y [Nm]	M_z [Nm]	
ASN	22	130	76	626	438	5.7	20	30	2
		210	111	1430	1002	10.7	72	102	3
		290	154	1988	1392	14.9	138	198	4
		370	196	2556	1790	19	226	324	5
		450	231	3402	2380	24	360	516	6
		530	274	3958	2770	28.2	496	710	7
		610	316	4524	3168	32.3	654	934	8
		690	351	5378	3764	37.3	872	1246	9
		770	394	5934	4154	41.5	1078	1538	10

* The value M_x refers to a single rail

Tab. 1

Type	Size	Length L [mm]	Stroke H [mm]	Load capacity and moments for a pair of rails					No. of holes
				C_{0rad} [N]	C_{0ax} [N]	M_x* [Nm]	M_y [Nm]	M_z [Nm]	
ASN	28	130	74	1226	858	15.3	40	56	2
		210	116	2232	1562	26.1	114	164	3
		290	148	3868	2708	39.6	264	376	4
		370	190	4890	3422	50.4	426	610	5
		450	232	5910	4138	61.2	628	898	6
		530	274	6932	4852	72	870	1242	7
		610	316	7952	5566	82.8	1150	1642	8
		690	358	8974	6282	93.6	1470	2100	9
		770	400	9994	6996	104.4	1828	2612	10
		850	433	11656	8160	117.9	2330	3330	11
		930	475	12676	8872	128.7	2778	3968	12
		1010	517	13696	9586	139.5	3262	4660	13
		1090	559	14716	10300	150.3	3788	5410	14
		1170	601	15736	11014	161.1	4350	6216	15
ASN	35	210	127	2130	1492	29.4	114	164	3
		290	159	4120	2884	46.9	292	416	4
		370	203	5276	3694	59.9	476	680	5
		450	247	6434	4504	73	708	1010	6
		530	279	8564	5994	90.4	1086	1550	7
		610	323	9716	6802	103.5	1422	2030	8
		690	367	10870	7608	116.6	1804	2576	9
		770	399	13042	9130	134	2382	3404	10
		850	443	14190	9932	147.1	2870	4100	11
		930	487	15338	10736	160.2	3404	4862	12
		1010	519	17530	12272	177.6	4184	5978	13
		1090	563	18674	13072	190.7	4824	6890	14
		1170	607	19818	13874	203.8	5508	7868	15
		1250	639	22024	15416	221.2	6490	9272	16
		1330	683	23164	16214	234.3	7280	10400	17
		1410	727	24306	17014	247.4	8116	11594	18
		1490	759	26520	18564	264.8	9300	13286	19

* The value M_x refers to a single rail

Tab. 2

Type	Size	Length L [mm]	Stroke H [mm]	Load capacity and moments for a pair of rails					No. of holes
				C_{0rad} [N]	C_{0ax} [N]	M_x* [Nm]	M_y [Nm]	M_z [Nm]	
ASN	43	210	123	3190	2234	60.6	168	240	3
		290	158	5744	4020	93.8	402	576	4
		370	208	6754	4728	115.9	616	880	5
		450	243	9380	6566	149.2	1018	1456	6
		530	278	12078	8454	182.4	1524	2176	7
		610	313	14822	10376	215.6	2128	3042	8
		690	363	15726	11008	237.8	2588	3698	9
		770	398	18464	12926	271	3362	4804	10
		850	433	21230	14862	304.2	4238	6054	11
		930	483	22108	15476	326.4	4878	6968	12
		1010	518	24868	17408	359.6	5922	8460	13
		1090	568	25754	18028	381.8	6674	9534	14
		1170	603	28508	19956	415	7886	11266	15
		1250	638	31276	21894	448.2	9198	13142	16
		1330	688	32150	22504	470.4	10130	14472	17
		1410	723	34912	24438	503.6	11612	16590	18
		1490	758	37690	26382	536.8	13196	18850	19
		1570	793	40476	28334	570.1	14880	21256	20
		1650	843	41322	28926	592.2	16058	22940	21
		1730	878	44104	30872	625.5	17912	25588	22
		1810	928	44958	31472	647.6	19202	27432	23
		1890	963	47734	33414	680.8	21224	30320	24
		1970	1013	48596	34018	703	22628	32324	25
ASN	63	610	333	21182	14828	474	3106	4438	8
		690	373	25068	17548	547.5	4144	5920	9
		770	413	28978	20284	621	5332	7616	10
		850	453	32904	23032	694.5	6668	9526	11
		930	493	36842	25790	768	8154	11648	12
		1010	533	40790	28554	841.4	9788	13984	13
		1090	573	44746	31322	914.9	11574	16534	14
		1170	613	48708	34096	988.4	13508	19296	15
		1250	653	52674	36872	1061.9	15590	22272	16
		1330	693	56644	39650	1135.4	17824	25462	17
		1410	733	60618	42432	1208.9	20204	28864	18
		1490	773	64594	45216	1282.4	22736	32480	19
		1570	813	68574	48002	1355.9	25416	36310	20
		1650	853	72554	50788	1429.4	28246	40352	21
		1730	893	76536	53576	1502.8	31226	44608	22
		1810	933	80522	56364	1576.3	34354	49078	23
		1890	973	84506	59154	1649.8	37632	53760	24
		1970	1013	88494	61946	1723.3	41060	58656	25

Tab. 3

* The value M_x refers to a single rail

ASN

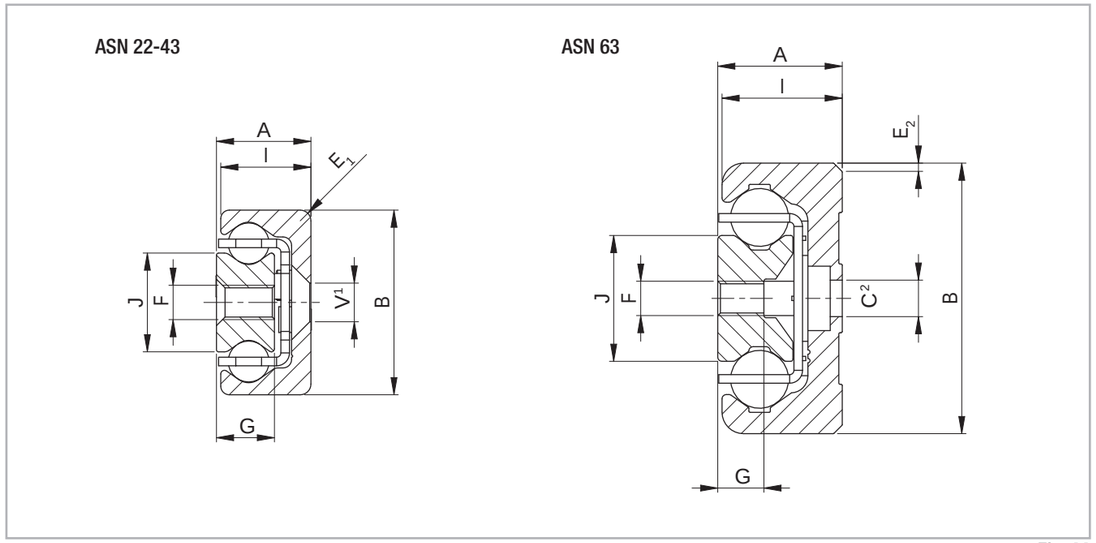

Fig. 38

[1] Fixing holes (V) for countersunk head screws according to DIN 7991
[2] Fixing holes (C) for socket cap screws according to DIN 7984. Alternative fixing with Torx® screws in special design with low head (on request)

Type	Size	Cross-section										Weight per single guide [kg/m]
		A [mm]	B [mm]	l [mm]	J [mm]	G [mm]	E_1 [mm]	E_2 [°]	V	C	F	
ASN	22	11	22	10.25	11.3	6.5	3	-	M4	-	M4	1.32
	28	13	28	12.25	15	7.5	1	-	M5	-	M5	2.02
	35	17	35	16	15.8	10	2	-	M6	-	M6	3.05
	43	22	43	21	23	13.5	2.5	-	M8	-	M8	5.25
	63	29	63	28	29.3	10.5	-	2 x 45	-	M8	M8	10.30

Tab. 4

DSS

DSS with one-sided extension (single stroke)

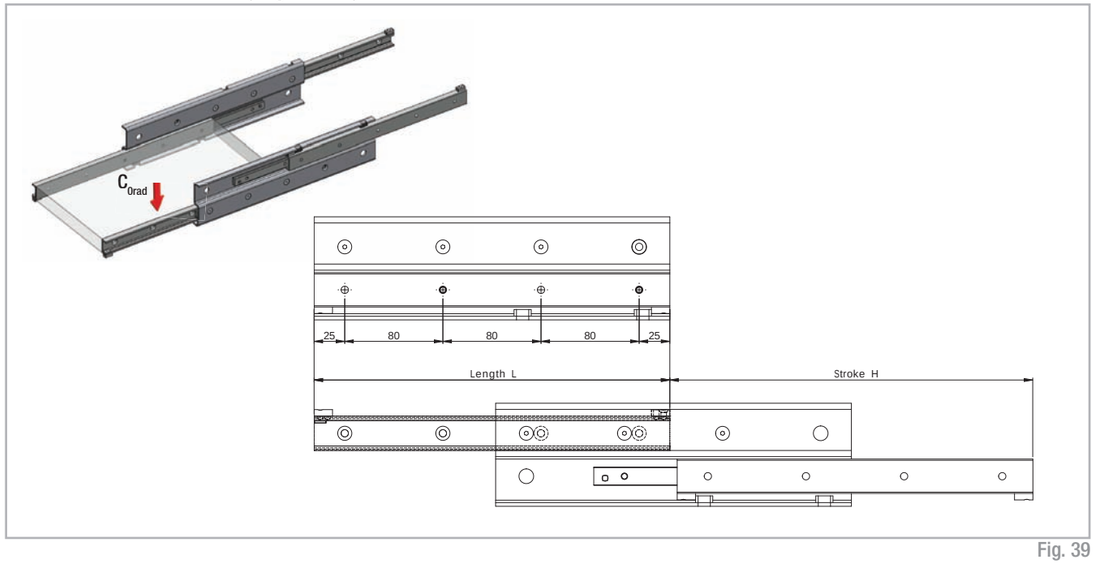

Fig. 39

Type	Size	Length L [mm]	Stroke H [mm]	Load capacity for a pair of rails C_{0rad} [N]	Accessible holes / total
DSS	28	290	296	1140	3 / 4
		370	380	1538	4 / 5
		450	464	1938	4 / 6
		530	548	2340	6 / 7
		610	630	2752	6 / 8
		690	714	3154	7 / 9
		770	798	3556	7 / 10
		850	864	4222	9 / 11
		930	950	4480	9 / 12
		1010	1034	4108	10 / 13
		1090	1118	3792	10 / 14
		1170	1202	3522	12 / 15
		1250	1266	3390	12 / 16
		1330	1350	3172	13 / 17
		1410	1434	2980	13 / 18
		1490	1518	2810	15 / 19

Tab. 5

Type	Size	Length L [mm]	Stroke H [mm]	Load capacity for a pair of rails C_{0rad} [N]	Accessible holes / total
DSS	35	450	494	2500	5 / 6
		530	558	3370	6 / 7
		610	646	3816	6 / 8
		690	734	4264	7 / 9
		770	798	5158	8 / 10
		850	886	5602	9 / 11
		930	974	6048	9 / 12
		1010	1038	6952	10 / 13
		1090	1126	7016	11 / 14
		1170	1214	6480	12 / 15
		1250	1278	6242	12 / 16
		1330	1366	5814	13 / 17
		1410	1454	5442	14 / 18
		1490	1518	5272	15 / 19
		1570	1606	4964	15 / 20
		1650	1694	4690	16 / 21
		1730	1758	4564	17 / 22

Tab. 6

Type	Size	Length L [mm]	Stroke H [mm]	Load capacity for a pair of rails C_{0rad} [N]	Accessible holes / total
DSS	43	530	556	4122	6 / 7
		610	626	5206	6 / 8
		690	726	5550	7 / 9
		770	796	6638	7 / 10
		850	866	7746	9 / 11
		930	966	8072	9 / 12
		1010	1036	9180	10 / 13
		1090	1106	10208	10 / 14
		1170	1206	9220	12 / 15
		1250	1276	8796	12 / 16
		1330	1376	8054	13 / 17
		1410	1446	7728	14 / 18
		1490	1516	7426	15 / 19
		1570	1616	6890	15 / 20
		1650	1686	6650	16 / 21
		1730	1756	6426	17 / 22
		1810	1856	6022	18 / 23
		1890	1926	5838	18 / 24
		1970	2026	5500	19 / 25

Tab. 7

Type	Size	Length L [mm]	Stroke H [mm]	Load capacity for a pair of rails C_{0rad} [N]	Accessible holes / total
DSS	63	610	666	7004	6 / 8
		690	746	8504	8 / 9
		770	826	10024	8 / 10
		850	906	11560	9 / 11
		930	986	13104	9 / 12
		1010	1066	14658	11 / 13
		1090	1146	16218	11 / 14
		1170	1226	17784	12 / 15
		1250	1306	19354	12 / 16
		1330	1386	20928	14 / 17
		1410	1466	22504	14 / 18
		1490	1546	24082	15 / 19
		1570	1626	25664	15 / 20
		1650	1706	24728	17 / 21
		1730	1786	23654	17 / 22
		1810	1866	22668	18 / 23
		1890	1946	21762	18 / 24
		1970	2026	20926	20 / 25

Tab. 8

DSS

DSS with one-sided extension (single stroke)

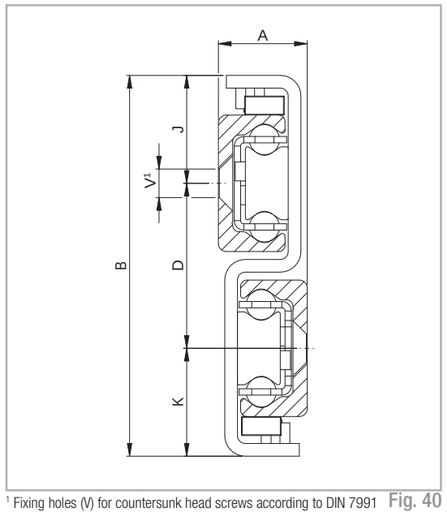

[1] Fixing holes (V) for countersunk head screws according to DIN 7991 Fig. 40

Type	Size	Cross-section A [mm]	B [mm]	K [mm]	D [mm]	J [mm]	V	Weight per single guide [kg/m]
DSS	28	17	84	24.5	35	24.5	M5	6.40
	35	22.5	104	30.5	43	30.5	M6	10.10
	43	28	120	34	52	34	M8	14.60
	63	40	208	64	80	64	M10	32.60

Tab. 9

DSS...S

...S version with reinforced and damped stainless steel end stops

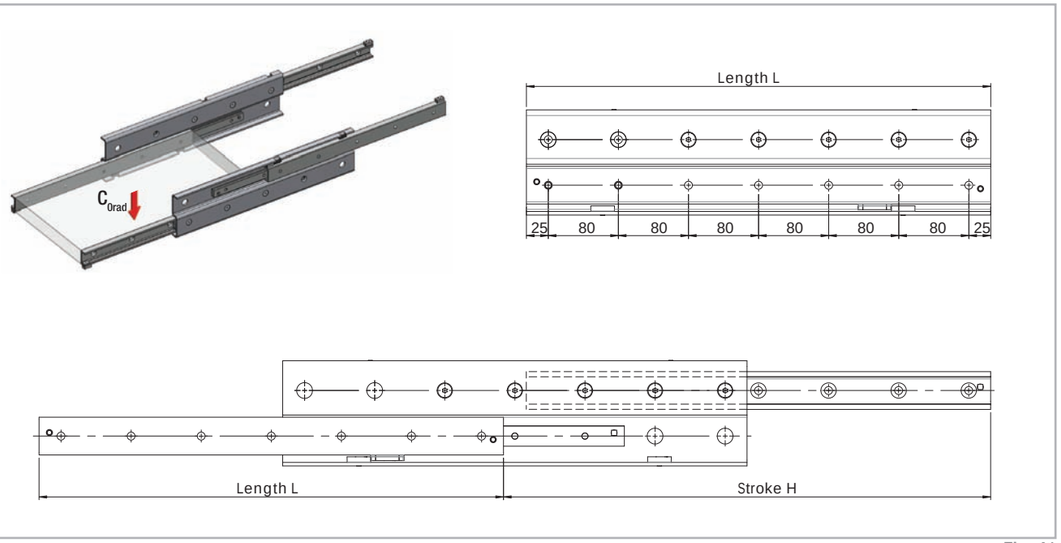

Fig. 41

Type	Size	Length L [mm]	Stroke H [mm]	Load capacity for a pair of rails C_{0rad} [N]	Accessible holes / total
DSS...S	43	530	556	4122	6 / 7
		610	626	5206	6 / 8
		690	726	5550	7 / 9
		770	796	6638	7 / 10
		850	866	7746	9 / 11
		930	966	8072	9 / 12
		1010	1036	9180	10 / 13
		1090	1106	10208	10 / 14
		1170	1206	9220	12 / 15
		1250	1276	8796	12 / 16
		1330	1376	8054	13 / 17
		1410	1446	7728	14 / 18
		1490	1516	7426	15 / 19
		1570	1616	6890	15 / 20
		1650	1686	6650	16 / 21
		1730	1756	6426	17 / 22
		1810	1856	6022	18 / 23
		1890	1926	5838	18 / 24
		1970	2026	5500	19 / 25

Tab. 10

DSS...S

...S version with reinforced and damped stainless steel end stops

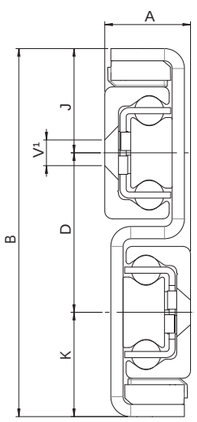

[1] Fixing holes (V) for countersunk head screws according to DIN 7991

Fig. 42

Type	Size	Cross-section						Weight per single guide [kg/m]
		A [mm]	B [mm]	K [mm]	D [mm]	J [mm]	V	
DSS...S	43	28	120	34	52	34	M8	14.60

Tab. 11

DSB

B version with locking system for closed position

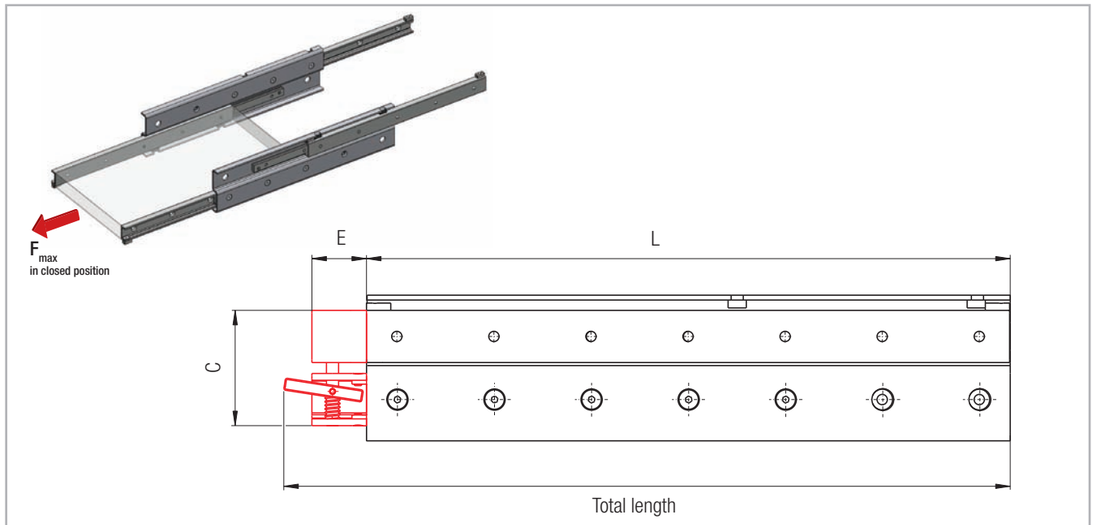

Fig. 43

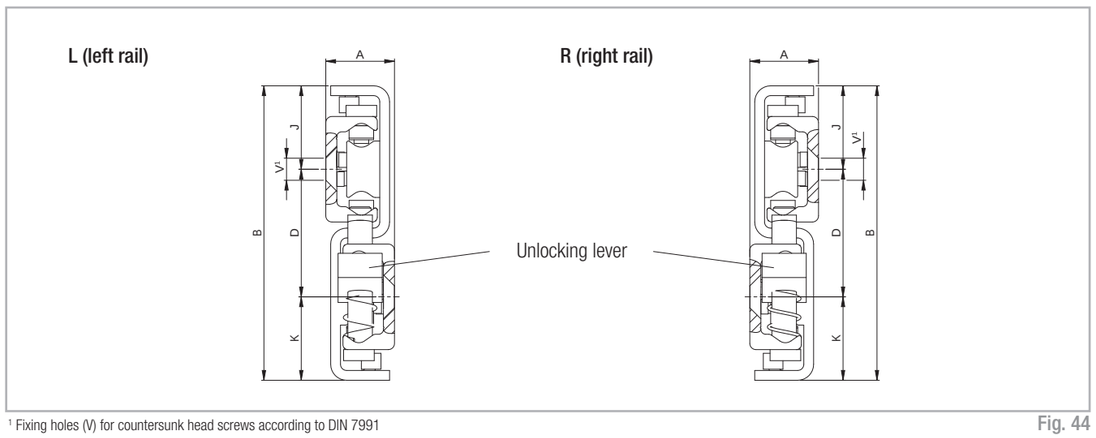

[1] Fixing holes (V) for countersunk head screws according to DIN 7991

Fig. 44

The DSB is built on the DSS design. The same load capacities, cross-sections and available rail lengths apply (see pg. TR-12ff). Data in Table 10 are based on the special features of the locking mechanism.

Please observe right or left installation for version DSB. The maximum load on the locking when closed is indicated by F_{max}*.

Type	Size	L [mm]	Total length [mm]	C [mm]	E [mm]	F_{max}*2 [N]	Weight per single guide [kg/m]
DSB	28	from 290 to 1490*	L + 52	63	35	2460	6.51
	35	from 450 to 1730*	L + 53	78	33	3000	10.4
	43	from 530 to 1970*	L + 69	95	45	5630	14.98

Tab. 12

* For available lengths, see pg. TR-12, tab. 5 and 7 (DSS)
*2 When using one lock

DSD

DSD with double direction stroke (double stroke)

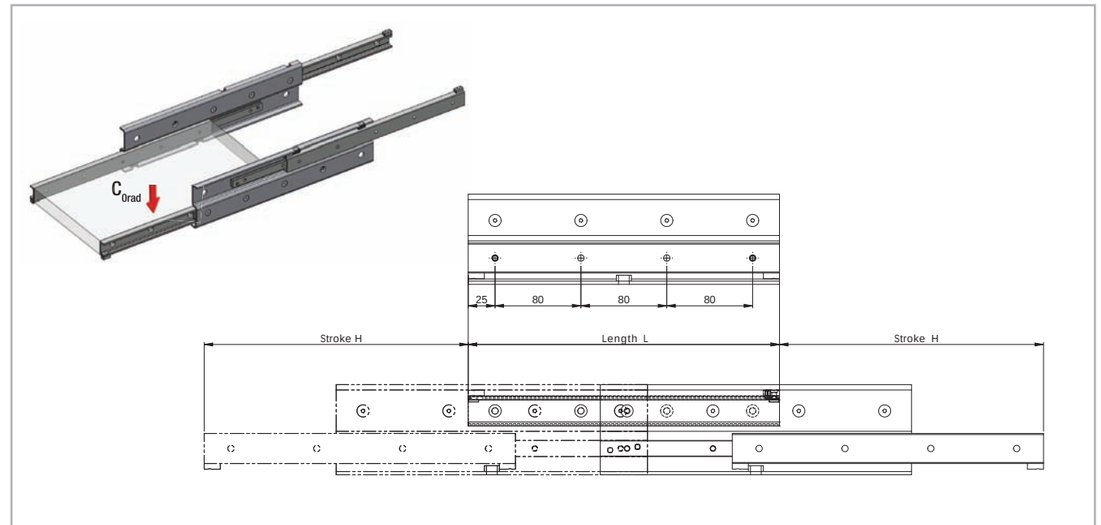

Fig. 45

Type	Size	Length L [mm]	Stroke H [mm]	Load capacity for a pair of rails C_{Orad} [N]	Accessible holes / total
DSD	28	290	246	1790	4 / 4
		370	326	2210	4 / 5
		450	406	2634	6 / 6
		530	486	3252	6 / 7
		610	566	3674	8 / 8
		690	646	4100	8 / 9
		770	726	4524	10 / 10
		850	806	4950	10 / 11
		930	886	5162	12 / 12
		1010	966	4714	12 / 13
		1090	1046	4336	14 / 14
		1170	1126	4016	14 / 15
		1250	1206	3740	16 / 16
		1330	1286	3498	16 / 17
		1410	1366	3288	18 / 18
		1490	1446	3100	18 / 19

Tab. 13

Type	Size	Length L [mm]	Stroke H [mm]	Load capacity for a pair of rails C_{Orad} [N]	Accessible holes / total
DSD	35	450	350	6050	4 / 6
		530	430	6382	6 / 7
		610	510	6762	6 / 8
		690	590	7600	8 / 9
		770	670	8016	8 / 10
		850	750	8446	10 / 11
		930	830	9292	10 / 12
		1010	910	9736	12 / 13
		1090	990	9160	12 / 14
		1170	1070	8404	14 / 15
		1250	1150	7764	14 / 16
		1330	1230	7214	16 / 17
		1410	1310	6738	16 / 18
		1490	1390	6320	18 / 19
		1570	1470	5950	18 / 20
		1650	1550	5622	20 / 21
		1730	1630	5328	20 / 22

Tab. 14

Type	Size	Length L [mm]	Stroke H [mm]	Load capacity for a pair of rails C_{0rad} [N]	Accessible holes / total
DSD	43	530	476	6036	6 / 7
		610	556	6530	8 / 8
		690	636	7562	8 / 9
		770	716	8594	10 / 10
		850	796	9094	10 / 11
		930	876	10126	12 / 12
		1010	956	11156	12 / 13
		1090	1036	11660	14 / 14
		1170	1116	10784	14 / 15
		1250	1196	10028	16 / 16
		1330	1276	9372	16 / 17
		1410	1356	8796	18 / 18
		1490	1436	8286	18 / 19
		1570	1516	7834	20 / 20
		1650	1596	7426	20 / 21
		1730	1676	7060	22 / 22
		1810	1756	6728	22 / 23
		1890	1836	6426	24 / 24
		1970	1916	6150	24 / 25

Tab. 15

Type	Size	Length L [mm]	Stroke H [mm]	Load capacity for a pair of rails C_{0rad} [N]	Accessible holes / total
DSD	63	610	398	23716	6 / 8
		690	478	24484	6 / 9
		770	558	25434	8 / 10
		850	638	26500	8 / 11
		930	718	27646	10 / 12
		1010	798	28848	10 / 13
		1090	878	30092	12 / 14
		1170	958	31368	12 / 15
		1250	1038	32668	14 / 16
		1330	1118	33988	14 / 17
		1410	1198	35322	16 / 18
		1490	1278	36670	16 / 19
		1570	1358	38018	18 / 20
		1650	1438	35538	18 / 21
		1730	1518	33360	20 / 22
		1810	1598	31436	20 / 23
		1890	1678	29720	22 / 24
		1970	1758	28182	22 / 25

Tab. 16

DSD

DSD with double direction stroke (double stroke)

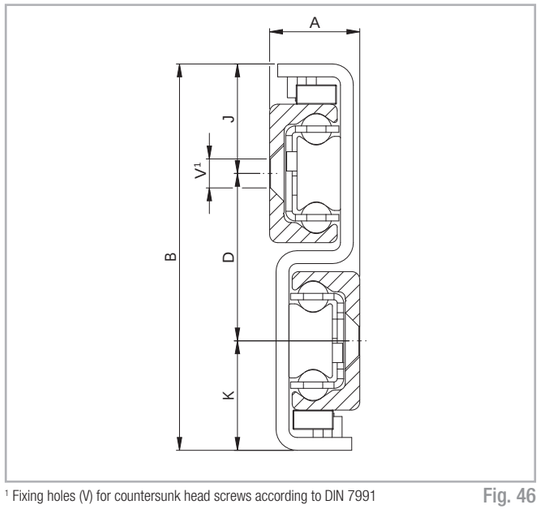

¹ Fixing holes (V) for countersunk head screws according to DIN 7991

Fig. 46

Type	Size	Cross-section						Weight per single guide [kg/m]
		A [mm]	B [mm]	K [mm]	D [mm]	J [mm]	V	
DSD	28	17	84	24.5	35	24.5	M5	6.40
	35	22.5	104	30.5	43	30.5	M6	10.10
	43	28	120	34	52	34	M8	14.60
	63	40	208	64	80	64	M10	32.60

Tab. 17

DSE

E version with extra stroke

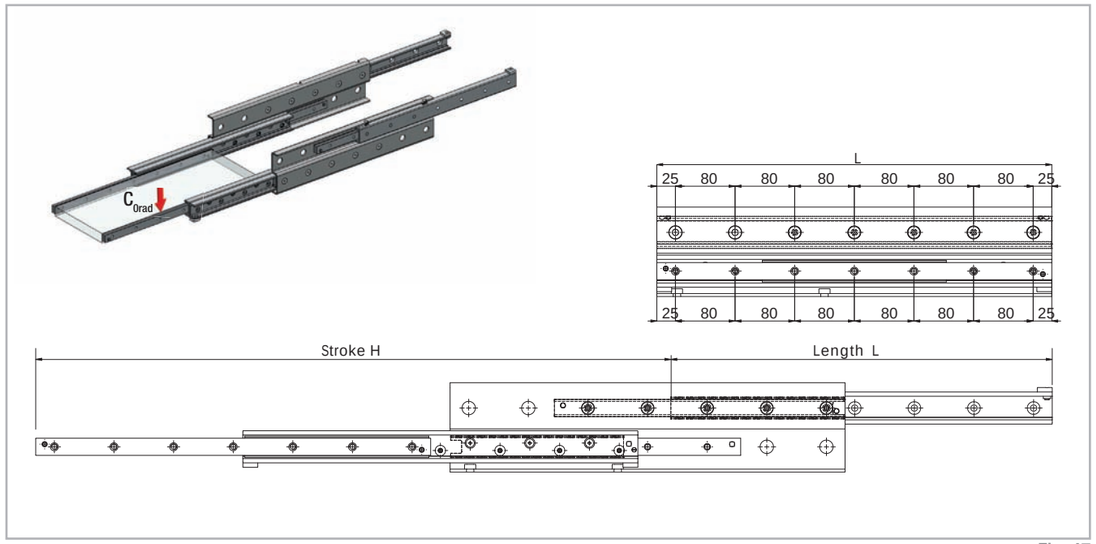

Fig. 47

Type	Size	Length L [mm]	Stroke H [mm]	Load capacity for a pair of rails C_{0rad} [N]	No. of holes fixed part	No. of holes mobile part
DSE	28	290	444	702	3 / 4	4
		370	570	952	4 / 5	5
		450	696	1200	4 / 6	6
		530	822	1450	6 / 7	7
		610	946	1702	6 / 8	8
		690	1072	1684	7 / 9	9
		770	1198	1506	7 / 10	10
		850	1297	1420	9 / 11	11
		930	1425	1292	9 / 12	12
		1010	1551	1184	10 / 13	13
		1090	1677	1094	10 / 14	14
		1170	1803	1016	12 / 15	15

Tab. 18

Type	Size	Length L [mm]	Stroke H [mm]	Load capacity for a pair of rails C_{0rad} [N]	No. of holes fixed part	No. of holes mobile part
DSE	35	450	741	1552	5 / 6	6
		530	837	2098	6 / 7	7
		610	969	2376	6 / 8	8
		690	1101	2652	7 / 9	9
		770	1197	3182	8 / 10	10
		850	1329	2850	9 / 11	11
		930	1461	2582	9 / 12	12
		1010	1557	2466	10 / 13	13
		1090	1689	2262	11 / 14	14
		1170	1821	2090	12 / 15	15
		1250	1917	2012	12 / 16	16
		1330	2049	1874	13 / 17	17
		1410	2181	1754	14 / 18	18
		1490	2277	1700	15 / 19	19

Tab. 19

Type	Size	Length L [mm]	Stroke H [mm]	Load capacity for a pair of rails C_{0rad} [N]	No. of holes fixed part	No. of holes mobile part
DSE	43	530	834	2582	6 / 7	7
		610	939	3264	6 / 8	8
		690	1089	3470	7 / 9	9
		770	1194	4154	7 / 10	10
		850	1299	4852	9 / 11	11
		930	1449	5012	9 / 12	12
		1010	1554	4728	10 / 13	13
		1090	1659	4476	11 / 14	14
		1170	1809	4044	12 / 15	15
		1250	1914	3856	12 / 16	16
		1330	2064	3532	13 / 17	17
		1410	2169	3388	13 / 18	18
		1490	2274	3256	15 / 19	19
		1570	2409	3078	15 / 20	20
		1650	2529	2916	16 / 21	21
		1730	2634	2818	16 / 22	22
		1810	2784	2640	18 / 23	23
		1890	2889	2560	18 / 24	24
		1970	3039	2412	19 / 25	25

Tab. 20

Type	Size	Length L [mm]	Stroke H [mm]	Load capacity for a pair of rails C_{0rad} [N]	No. of holes fixed part	No. of holes mobile part
DSE	63	610	999	4328	6 / 8	8
		690	1119	5260	8 / 9	9
		770	1239	6208	8 / 10	10
		850	1359	7164	9 / 11	11
		930	1479	8128	9 / 12	12
		1010	1599	9096	11 / 13	13
		1090	1719	10070	11 / 14	14
		1170	1839	11046	12 / 15	15
		1250	1959	11344	12 / 16	16
		1330	2079	10714	14 / 17	17
		1410	2199	10152	14 / 18	18
		1490	2319	9644	15 / 19	19
		1570	2439	9186	15 / 20	20
		1650	2559	8768	17 / 21	21
		1730	2679	8388	17 / 22	22
		1810	2799	8038	18 / 23	23
		1890	2919	7718	18 / 24	24
		1970	3039	7420	20 / 25	25

Tab. 21

DSE

E version with extra stroke

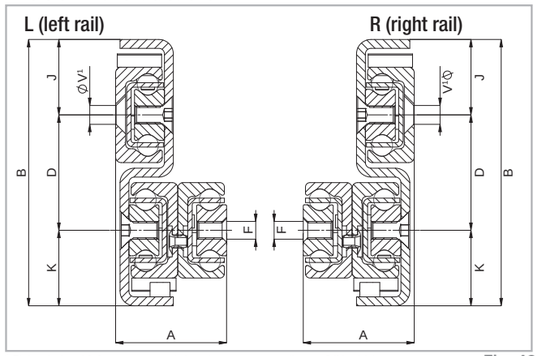

Fig. 48

[1] Fixing holes (V) for countersunk head screws according to DIN 7991
Please observe right or left installation for version DSE.

Type	Size	Cross-section							Weight per single guide [kg/m]
		A [mm]	B [mm]	K [mm]	D [mm]	J [mm]	F	V[1]	
DSE	28	30	84	24.5	35	24.5	M5	M5	8.4
	35	39.5	104	30.5	43	30.5	M6	M6	13.2
	43	50	120	34	52	34	M8	M8	19.9
	63	69	208	64	80	64	M8	M10	42.9

Tab. 22

DSC

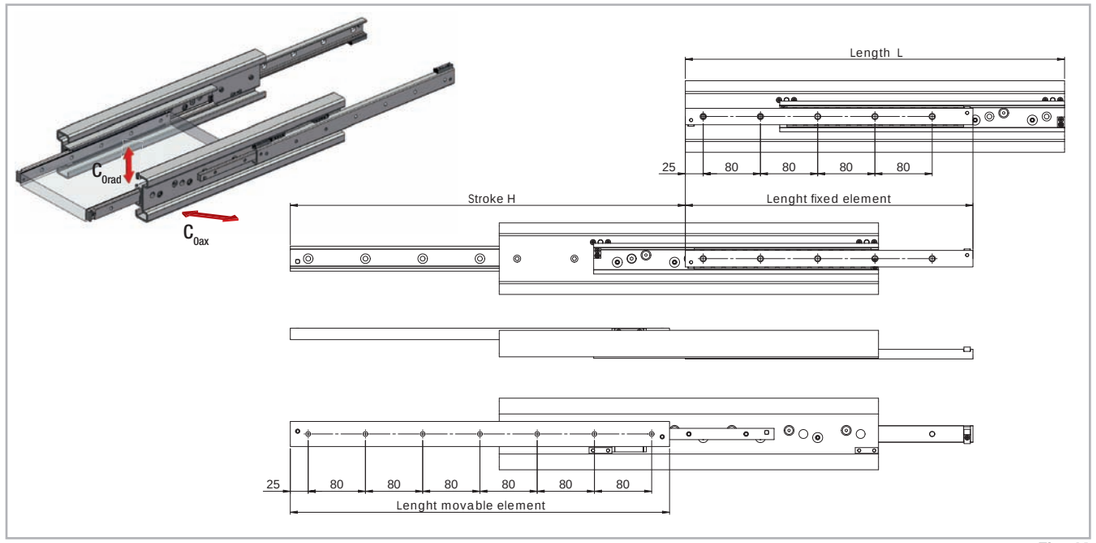

Fig. 49

Type	Size	Length L [mm]	Stroke H [mm]	Load capacity for a pair of rails		Fixed element		Movable element	
				C_{0rad} [N]	C_{0ax} [N]	Accessible holes / total	Length [mm]	Accessible holes / total	Length [mm]
DSC	43	530	552	4780	3346	5 / 5	402	6 / 7	530
		610	619	5928	4150	6 / 6	465	6 / 8	610
		690	725	6190	3840	6 / 6	520	8 / 9	690
		770	792	7332	3584	7 / 7	582	8 / 10	770
		850	859	8492	3362	8 / 8	644	9 / 11	850
		930	965	8738	2918	9 / 9	700	9 / 12	930
		1010	1029	10508	2784	10 / 10	770	11 / 13	1010
		1090	1099	11058	2634	10 / 10	825	11 / 14	1090
		1170	1202	10354	2364	11 / 11	887	12 / 15	1170
		1250	1272	9874	2254	12 / 12	942	12 / 16	1250
		1330	1375	8998	2054	13 / 13	1005	14 / 17	1330
		1410	1445	8634	1972	14 / 14	1060	14 / 18	1410
		1490	1509	8362	1910	14 / 14	1130	15 / 19	1490
		1570	1615	7698	1758	15 / 15	1185	16 / 20	1570
		1650	1685	7428	1696	15 / 15	1240	16 / 21	1650
		1730	1752	7202	1644	16 / 16	1302	17 / 22	1730
		1810	1843	6812	1556	17 / 17	1365	18 / 23	1810
		1890	1922	6540	1494	18 / 18	1427	19 / 24	1890
		1970	2028	6126	1390	19 / 19	1482	20 / 25	1970

Tab. 23

DSC

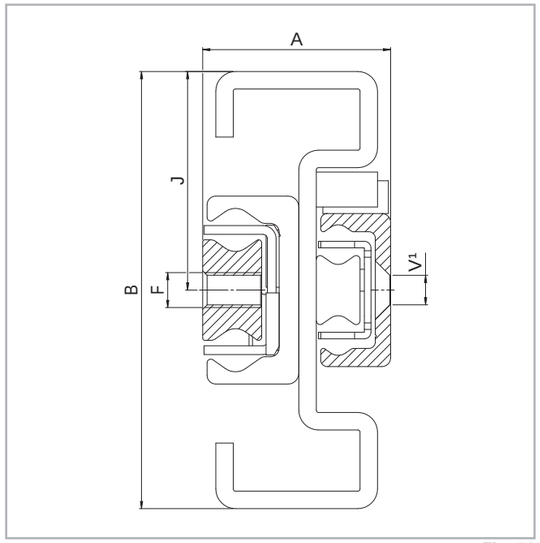

[1] Fixing holes (V) for countersunk head screws according to DIN 7991

Fig. 50

Type	Size	Cross-section					Weight per single guide [kg/m]
		A [mm]	B [mm]	J [mm]	F [mm]	V[1] [mm]	
DSC	43	43	100	50	M8	M6	13.4

Tab. 24

DE

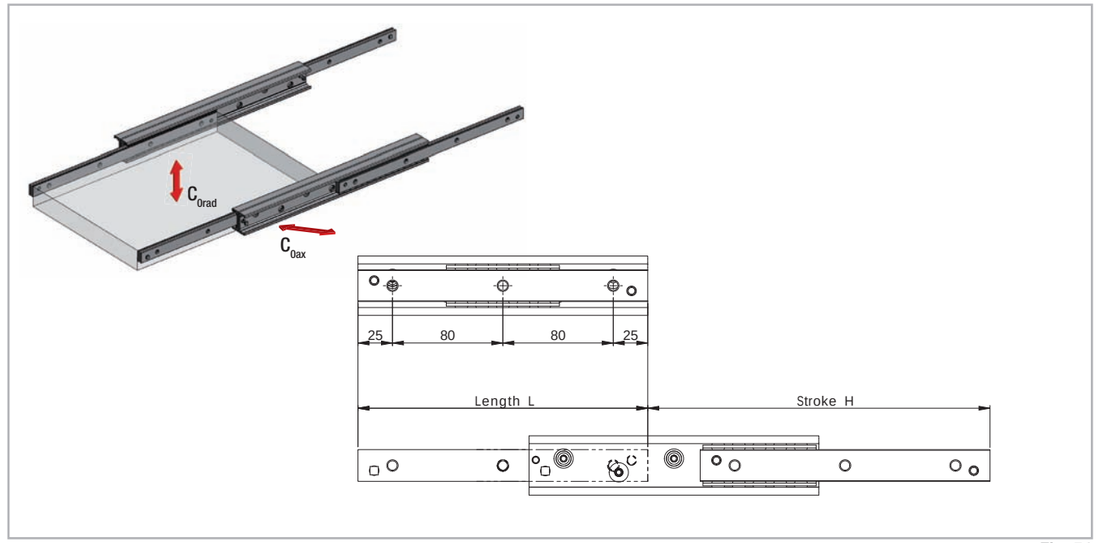

* Remove the set screw to reach all the fixing holes. See also assembly instructions on page TR-47f.

Fig. 51

Type	Size	Length L [mm]	Stroke H [mm]	Load capacity for a pair of rails		No. of holes
				C_{0rad} [N]	C_{0ax} [N]	
DEF DEV DEM	22	130	152	238	166	2
		210	222	562	392	3
		290	308	780	546	4
		370	392	1002	526	5
		450	462	1348	460	6
		530	548	1142	386	7
		610	632	988	334	8
		690	702	906	306	9
		770	788	802	270	10

Tab. 25

Type	Size	Length L [mm]	Stroke H [mm]	Load capacity for a pair of rails		No. of holes
				C_{0rad} [N]	C_{0ax} [N]	
DEF DEV DEM	28	130	148	470	328	2
		210	232	864	604	3
		290	296	1534	1074	4
		370	380	1936	942	5
		450	464	2338	770	6
		530	548	2214	650	7
		610	633	1910	560	8
		690	717	1684	494	9
		770	801	1506	442	10
		850	866	1420	416	11
		930	950	1292	378	12
		1010	1034	1184	348	13
		1090	1118	1094	320	14
		1170	1202	1016	298	15

Tab. 26

Type	Size	Length L [mm]	Stroke H [mm]	Load capacity for a pair of rails		No. of holes
				C_{0rad} [N]	C_{0ax} [N]	
DEF DEV DEM	35	210	254	804	562	3
		290	318	1600	1120	4
		370	406	2050	1436	5
		450	494	2500	1586	6
		530	558	3370	1456	7
		610	646	3816	1252	8
		690	734	3378	1096	9
		770	798	3182	1032	10
		850	886	2850	926	11
		930	974	2582	838	12
		1010	1038	2466	800	13
		1090	1126	2262	734	14
		1170	1214	2090	678	15
		1250	1278	2012	654	16
		1330	1366	1874	608	17
		1410	1454	1754	570	18
		1490	1518	1700	552	19

Tab. 27

Type	Size	Length L [mm]	Stroke H [mm]	Load capacity for a pair of rails		No. of holes
				C_{0rad} [N]	C_{0ax} [N]	
DEF DEV DEM	43	210	246	1210	848	3
		290	316	2228	1560	4
		370	416	2600	1820	5
		450	486	3656	2558	6
		530	556	4750	2868	7
		610	626	5868	2600	8
		690	726	6182	2192	9
		770	796	6110	2032	10
		850	866	5694	1892	11
		930	966	5012	1666	12
		1010	1036	4728	1572	13
		1090	1106	4476	1488	14
		1170	1206	4044	1344	15
		1250	1276	3856	1282	16
		1330	1376	3532	1174	17
		1410	1446	3388	1126	18
		1490	1516	3256	1082	19
		1570	1586	3134	1042	20
		1650	1686	2916	970	21
		1730	1756	2818	936	22
		1810	1856	2640	878	23
		1890	1926	2560	850	24
		1970	2026	2412	802	25

Tab. 28

Type	Size	Length L [mm]	Stroke H [mm]	Load capacity for a pair of rails		No. of holes
				C_{0rad} [N]	C_{0ax} [N]	
DEF	63	610	666	8180	5726	8
		690	746	9718	6124	9
		770	826	11270	5568	10
		850	906	12830	5106	11
		930	986	14396	4714	12
		1010	1066	13770	4378	13
		1090	1146	12854	4086	14
		1170	1226	12052	3832	15
		1250	1306	11344	3606	16
		1330	1386	10714	3406	17
		1410	1466	10152	3228	18
		1490	1546	9644	3066	19
		1570	1626	9186	2920	20
		1650	1706	8768	2788	21
		1730	1786	8388	2666	22
		1810	1866	8038	2556	23
		1890	1946	7718	2454	24
		1970	2026	7420	2360	25

Tab. 29

DE

DE 22-43

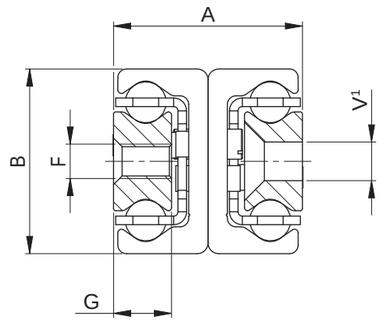

DEF 63

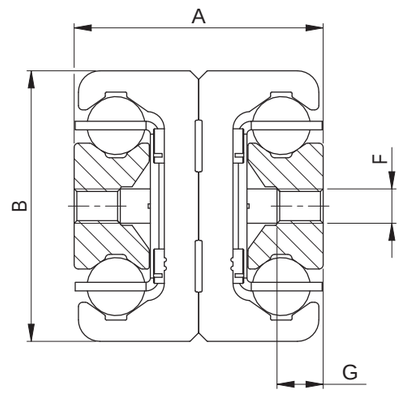

[1] Fixing holes (V) for countersunk head screws according to DIN 7991

Fig. 52

Type	Size	Cross-section					Weight per single guide [kg/m]
		A [mm]	B [mm]	G [mm]	F	V	
DEF DEV DEM	22	22	22	6.5	M4	M4	2.64
	28	26	28	7.5	M5	M5	4.04
	35	34	35	10	M6	M6	6.10
	43	44	43	13.5	M8	M8	10.50
	63	58	63	10.5	M8	-	20.60

Tab. 30

There are three options for mounting holes available for the DE series in sizes 22 to 43:
Version DEF with threaded holes,
Version DEV with counter-sunk holes,
Version DEM, both variants (mixed) (see fig. 52).
Size 63 is only available with threaded holes.

DE...S

...S version with reinforced and damped stainless steel end stops

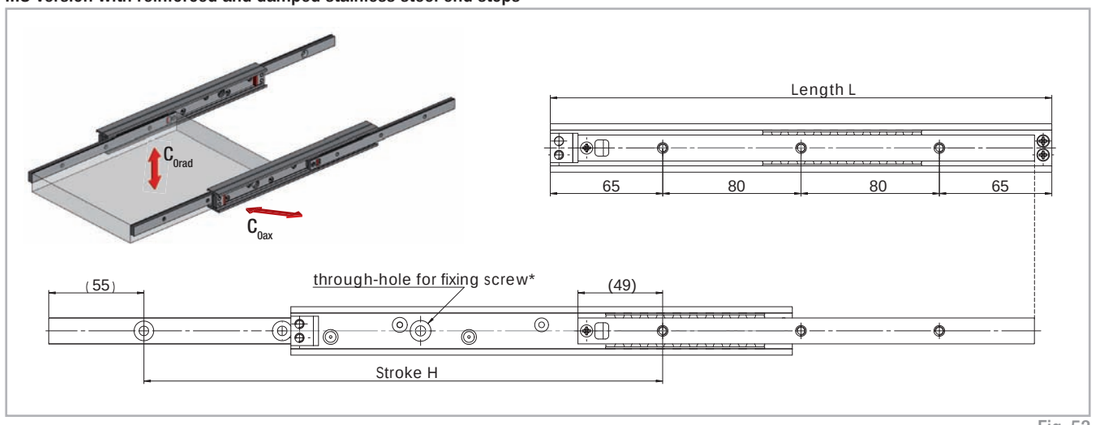

Fig. 53

Type	Size	Length L [mm]	Stroke H [mm]	Load capacity for a pair of rails		Slider [mm]	B [mm]	No of holes
				C_{0rad} [N]	C_{0ax} [N]			
DE...S	28	290	300	704	494	264	49	3
		370	384	1084	758	344	49	4
		450	468	1470	756	424	49	5
		530	533	2100	686	504	49	6
		610	636	1892	556	584	49	7
		690	701	1760	516	664	49	8
		770	804	1494	438	744	49	9
		850	850	1474	432	824	49	10
		930	953	1284	376	904	49	11
		1010	1018	1222	358	984	49	12
		1090	1102	1124	330	1064	49	13
		1170	1186	1042	306	1144	49	14

Tab. 31

Type	Size	Length L [mm]	Stroke H [mm]	Load capacity for a pair of rails		Slider [mm]	B [mm]	No of holes
				C_{0rad} [N]	C_{0ax} [N]			
DE...S	35	370	370	1430	1000	338	45	4
		450	464	1788	1252	418	45	5
		530	536	2476	1574	498	45	6
		610	630	2832	1312	578	45	7
		690	702	3540	1194	658	45	8
		770	796	3198	1038	738	45	9
		850	868	2966	962	818	45	10
		930	962	2644	858	898	45	11
		1010	1012	2592	842	978	45	12
		1090	1128	2254	732	1058	45	13
		1170	1178	2216	720	1138	45	14
		1250	1272	2030	660	1218	45	15
		1330	1344	1936	628	1298	45	16
		1410	1438	1792	582	1378	45	17
		1490	1510	1718	558	1458	45	18

Tab. 32

Type	Size	Length L [mm]	Stroke H [mm]	Load capacity for a pair of rails		Slider [mm]	B [mm]	No of holes
				C_{0rad} [N]	C_{0ax} [N]			
DE...S	43	370	366	2014	1410	338	45	4
		450	496	1864	1306	418	45	5
		530	536	3418	2394	498	45	6
		610	636	3796	2522	578	45	7
		690	706	4838	2312	658	45	8
		770	806	5206	1982	738	45	9
		850	846	5964	1982	818	45	10
		930	976	4914	1634	898	45	11
		1010	1016	4914	1634	978	45	12
		1090	1116	4398	1462	1058	45	13
		1170	1186	4178	1390	1138	45	14
		1250	1286	3798	1262	1218	45	15
		1330	1326	3798	1262	1298	45	16
		1410	1456	3344	1112	1378	45	17
		1490	1496	3344	1112	1458	45	18
		1570	1596	3096	1030	1538	45	19
		1650	1666	2986	992	1618	45	20
		1730	1766	2786	926	1698	45	21
		1810	1806	2786	926	1778	45	22
		1890	1936	2534	842	1858	45	23
		1970	2066	2322	772	1938	45	24

Tab. 33

DE...S

...S version with reinforced and damped stainless steel end stops

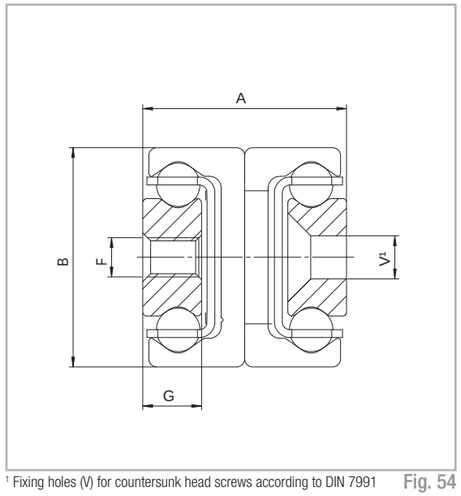

[1] Fixing holes (V) for countersunk head screws according to DIN 7991 Fig. 54

Type	Size	Cross-section					Weight per single guide [kg/m]
		A [mm]	B [mm]	G [mm]	F	V	
DE...S	28	26	28	7.5	M5	M5	4.04
	35	34	35	10	M6	M6	6.10
	43	44	43	13.5	M8	M8	10.50

Tab. 34

DE...D

DED with double direction stroke (double stroke)

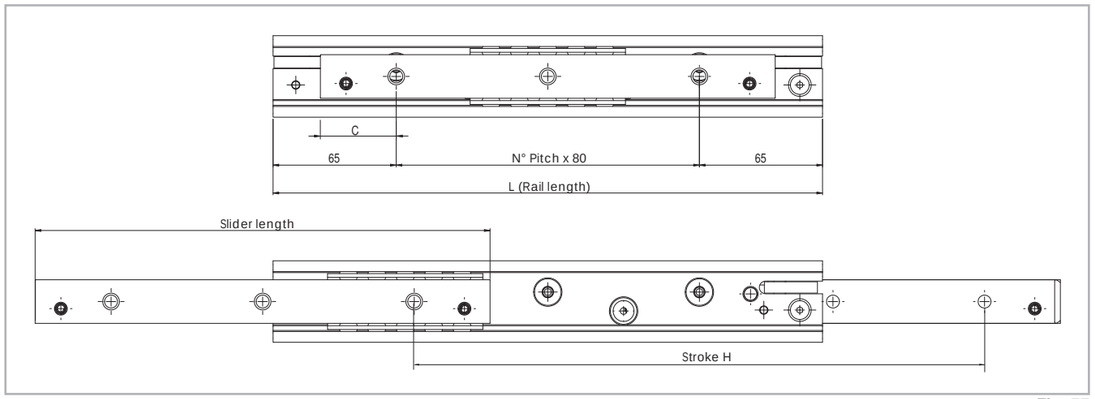

Fig. 55

D version (with a driving disc)

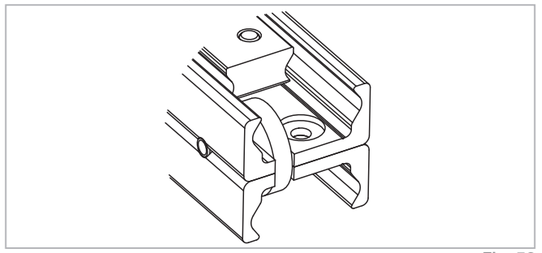

Fig. 56

The driving disc in the intermediate element in the DE...D versions acts to make sure that in bilateral strokes (double strokes) the intermediate element always returns to the correct position and does not remain in an undefined position. This design is available in sizes 28, 35, 43 and 63 with all three versions of the fixing holes. This version is based on the standard DE series version, but differs in the technical characteristics for the construction methods. Please contact our technical service department for more information.

Type	Size	Length L [mm]	Stroke H [mm]	Load capacity for a pair of rails C_{0rad} [N]	Load capacity for a pair of rails C_{0ax} [N]	Slider [mm]	C [mm]	No. of holes
DED...D DEV...D DEN...D	43	290	301	1002	702	240	40	3
		370	401	1400	980	320	40	4
		450	471	2318	1622	400	40	5
		530	541	3312	2318	480	40	6
		610	641	3696	2484	560	40	7
		690	711	4724	2280	640	40	8
		770	781	5784	2108	720	40	9
		850	881	5506	1830	800	40	10
		930	951	5166	1718	880	40	11
		1010	1021	4866	1618	960	40	12
		1090	1121	4360	1450	1040	40	13
		1170	1191	4144	1378	1120	40	14
		1250	1261	3948	1312	1200	40	15
		1330	1361	3608	1200	1280	40	16
		1410	1431	3458	1150	1360	40	17
		1490	1501	3322	1104	1440	40	18
		1570	1601	3076	1024	1520	40	19
		1650	1671	2968	986	1600	40	20
		1730	1741	2866	952	1680	40	21
		1810	1841	2682	892	1760	40	22
		1890	1911	2600	864	1840	40	23
		1970	2011	2448	814	1920	40	24

Tab. 37

Type	Size	Length L [mm]	Stroke H [mm]	Load capacity for a pair of rails C_{0rad} [N]	Load capacity for a pair of rails C_{0ax} [N]	Slider [mm]	C [mm]	No. of holes
DEF...D	63	610	602	7688	5382	558	39	7
		690	682	9236	6466	638	39	8
		770	762	10796	6514	718	39	9
		850	842	12362	5890	798	39	10
		930	922	13934	5374	878	39	11
		1010	1002	15512	4942	958	39	12
		1090	1082	14386	4574	1038	39	13
		1170	1162	13388	4256	1118	39	14
		1250	1242	12520	3980	1198	39	15
		1330	1322	11758	3738	1278	39	16
		1410	1402	11084	3524	1358	39	17
		1490	1482	10482	3332	1438	39	18
		1570	1562	9942	3160	1518	39	19
		1650	1642	9456	3006	1598	39	20
		1730	1722	9014	2866	1678	39	21
		1810	1802	8612	2738	1758	39	22
		1890	1882	8244	2620	1838	39	23
		1970	1962	7906	2514	1918	39	24

Tab. 38

Type	Size	Length L [mm]	Stroke H [mm]	Load capacity for a pair of rails C_{0rad} [N]	Load capacity for a pair of rails C_{0ax} [N]	Slider [mm]	C [mm]	No. of holes
DEF...D DEV...D DEM...D	28	290	292	836	586	250	45	3
		370	376	1224	856	330	45	4
		450	460	1618	782	410	45	5
		530	544	2014	658	490	45	6
		610	628	1940	570	570	45	7
		690	712	1706	500	650	45	8
		770	796	1524	448	730	45	9
		850	880	1376	404	810	45	10
		930	964	1256	368	890	45	11
		1010	1048	1154	338	970	45	12
		1090	1132	1068	314	1050	45	13
		1170	1216	992	292	1130	45	14

Tab. 35

Type	Size	Length L [mm]	Stroke H [mm]	Load capacity for a pair of rails C_{0rad} [N]	Load capacity for a pair of rails C_{0ax} [N]	Slider [mm]	C [mm]	No. of holes
DEF...D DEV...D DEM...D	35	290	303	890	624	250	45	3
		370	391	1322	926	330	45	4
		450	479	1760	1232	410	45	5
		530	543	2562	1534	490	45	6
		610	631	3012	1308	570	45	7
		690	719	3460	1140	650	45	8
		770	783	3302	1072	730	45	9
		850	871	2946	956	810	45	10
		930	959	2660	864	890	45	11
		1010	1023	2536	824	970	45	12
		1090	1111	2322	754	1050	45	13
		1170	1199	2140	694	1130	45	14
		1250	1263	2060	668	1210	45	15
		1330	1351	1916	622	1290	45	16
		1410	1439	1790	582	1370	45	17
		1490	1503	1734	562	1450	45	18

Tab. 36

DED version D

DED with double direction stroke (double stroke)

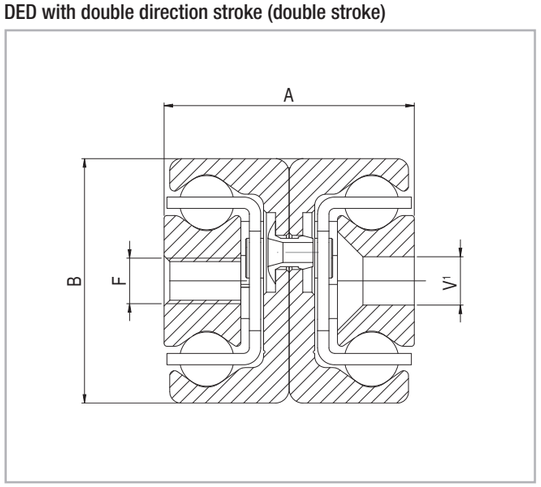

¹ Fixing holes (V) for countersunk head screws according to DIN 7991

Fig. 57

Type	Size	Cross-section A [mm]	Cross-section B [mm]	Cross-section F	Cross-section V¹	Weight per single guide [kg/m]
DE...D	28	26	28	M5	M5	4.04
	35	34	35	M6	M6	6.10
	43	44	43	M8	M8	10.50
	63	58	63	M8	-	20.60

Tab. 39

There are three options for mounting holes available for the DE...D series in sizes 28 to 43:
Version DEF with threaded holes,
Version DEV with counter-sunk holes,
Version DEM, both variants (mixed).
Size 63 is only available with threaded holes.

DE...Z

Version Z with synchronized full extension

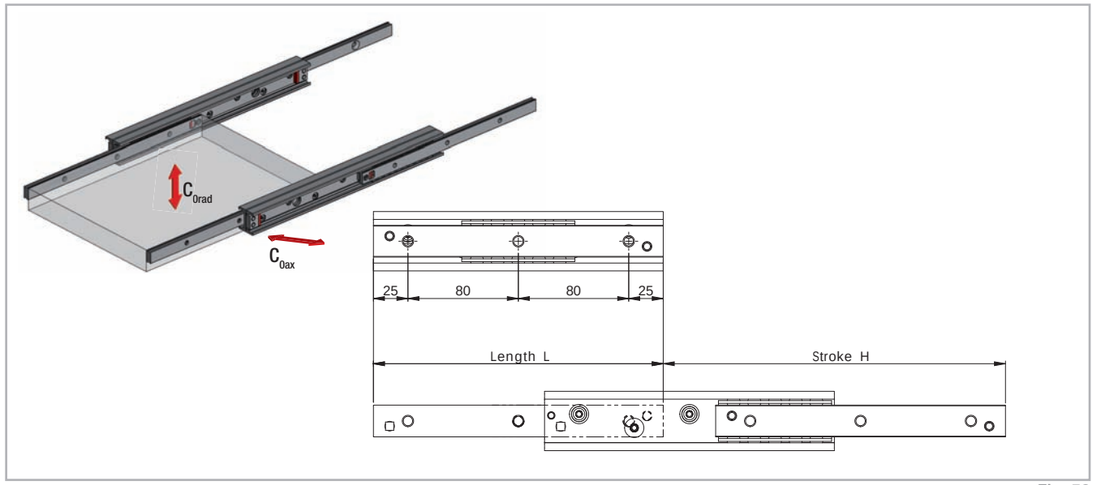

Fig. 58

Type[1]	Size	Length L [mm]	Stroke H [mm]	Load capacity for a pair of rails		No. of holes
				C_{0rad} [N]	C_{0ax} [N]	
DEF...Z	43	290	243	1746	1222	4
		370	323	1947	1363	5
		450	403	2481	1737	6
		530	483	3016	1915	7
		610	563	3229	1618	8
		690	643	3762	1401	9
		770	723	3714	1235	10
		850	803	3321	1104	11
		930	883	3004	999	12
		1010	963	2741	911	13
		1090	1043	2521	838	14
		1170	1123	2334	776	15
		1250	1203	2172	722	16
		1330	1283	2032	675	17
		1410	1363	1908	634	18
		1490	1443	1799	598	19
		1570	1523	1701	566	20
		1650	1603	1614	537	21
		1730	1683	1535	510	22
		1810	1763	1463	486	23
		1890	1843	1398	465	24
		1970	1923	1338	445	25

[1] The synchronized full extension is only available in version F with threaded mounting holes

Tab. 40

DE...Z

DE...Z with double direction stroke (double stroke)

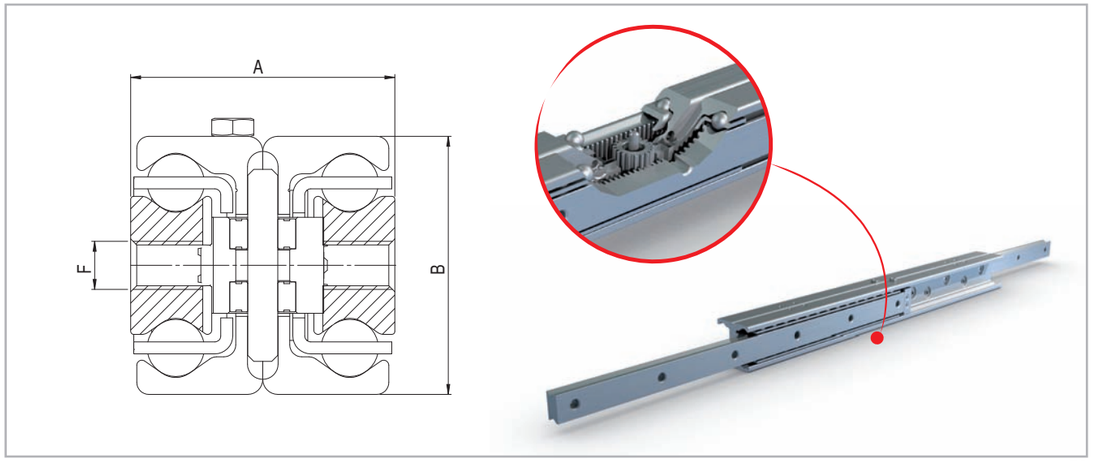

[1] Fixing holes (V) for countersunk head screws according to DIN 7991

Fig. 59

Type	Size	Cross-section			Weight per single guide [kg/m]
		A [mm]	B [mm]	F	
DEF...Z	43	44	43	M8	10.50

Tab. 41

DBN

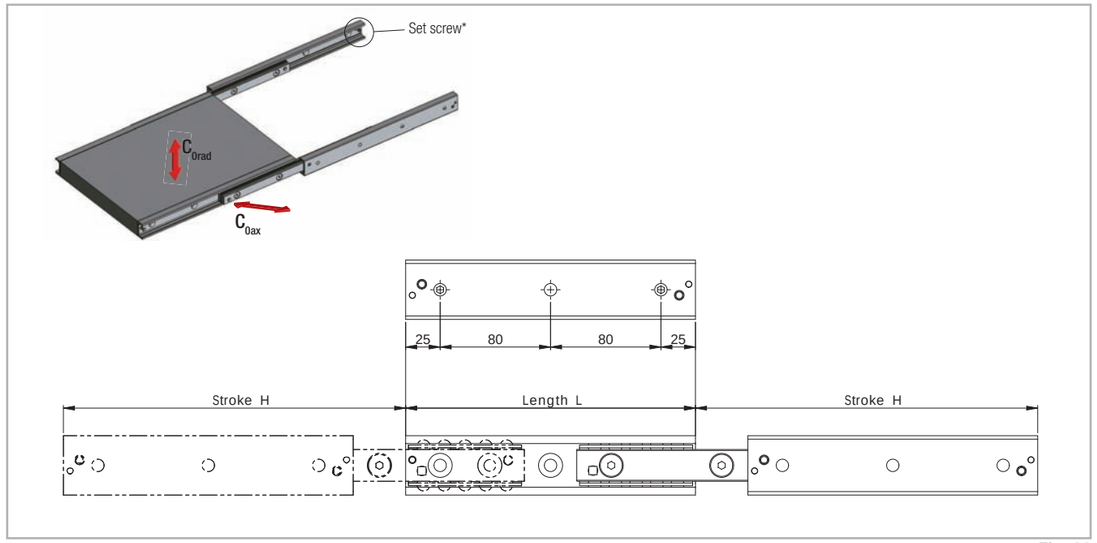

* Remove the set screw to reach all the fixing holes. See also assembly instructions on page TR-47f.

Fig. 60

Type	Size	Length L [mm]	Stroke H [mm]	Load capacity for a pair of rails		No. of holes
				C_{0rad} [N]	C_{0ax} [N]	
DBN	22	130	152	238	166	2
		210	222	562	392	3
		290	308	472	472	4
		370	392	372	372	5
		450	462	324	324	6
		530	548	272	272	7
		610	632	234	234	8
		690	702	216	216	9
		770	788	190	190	10

Tab. 42

Type	Size	Length L [mm]	Stroke H [mm]	Load capacity for a pair of rails		No. of holes
				C_{0rad} [N]	C_{0ax} [N]	
DBN	28	130	148	470	328	2
		210	232	864	604	3
		290	296	1244	1074	4
		370	380	964	964	5
		450	464	786	786	6
		530	548	664	664	7
		610	633	572	572	8
		690	717	504	504	9
		770	801	452	452	10
		850	866	426	426	11
		930	950	388	388	12
		1010	1034	356	356	13
		1090	1118	328	328	14
		1170	1202	304	304	15

Tab. 43

Type	Size	Length L [mm]	Stroke H [mm]	Load capacity for a pair of rails		No. of holes
				C_{0rad} [N]	C_{0ax} [N]	
DBN	35	210	254	804	562	3
		290	318	1334	1120	4
		370	406	1044	1044	5
		450	494	858	858	6
		530	558	788	788	7
		610	646	676	676	8
		690	734	594	594	9
		770	798	558	558	10
		850	886	500	500	11
		930	974	454	454	12
		1010	1038	434	434	13
		1090	1126	398	398	14
		1170	1214	366	366	15
		1250	1278	354	354	16
		1330	1366	330	330	17
		1410	1454	308	308	18
		1490	1518	298	298	19

Tab. 44

Type	Size	Length L [mm]	Stroke H [mm]	Load capacity for a pair of rails		No. of holes
				C_{0rad} [N]	C_{0ax} [N]	
DBN	43	210	246	1210	848	3
		290	316	2228	1560	4
		370	416	2600	1820	5
		450	486	2662	2558	6
		530	556	2386	2386	7
		610	626	2164	2164	8
		690	726	1824	1824	9
		770	796	1690	1690	10
		850	866	1576	1576	11
		930	966	1386	1386	12
		1010	1036	1308	1308	13
		1090	1106	1238	1238	14
		1170	1206	1118	1118	15
		1250	1276	1066	1066	16
		1330	1376	976	976	17
		1410	1446	938	938	18
		1490	1516	900	900	19
		1570	1586	868	868	20
		1650	1686	806	806	21
		1730	1756	780	780	22
		1810	1856	730	730	23
		1890	1926	708	708	24
		1970	2026	668	668	25

Tab. 45

DBN

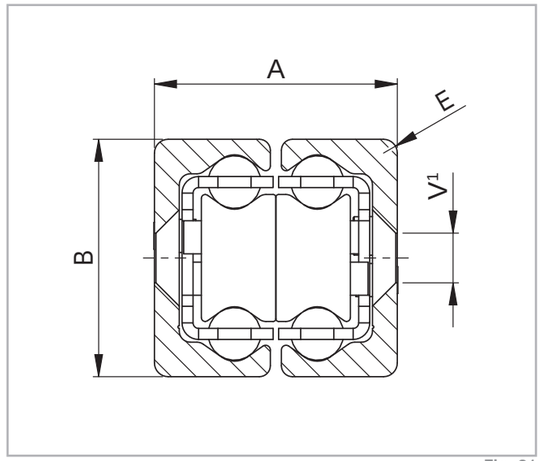

¹ Fixing holes (V) for countersunk head screws according to DIN 7991

Fig. 61

Type	Size	Cross-section				Weight per single guide [kg/m]
		A [mm]	B [mm]	E [mm]	V	
DBN	22	22	22	3	M4	2.64
	28	26	28	1	M5	4.04
	35	34	35	2	M6	6.10
	43	44	43	2.5	M8	10.50

Tab. 46

DMS

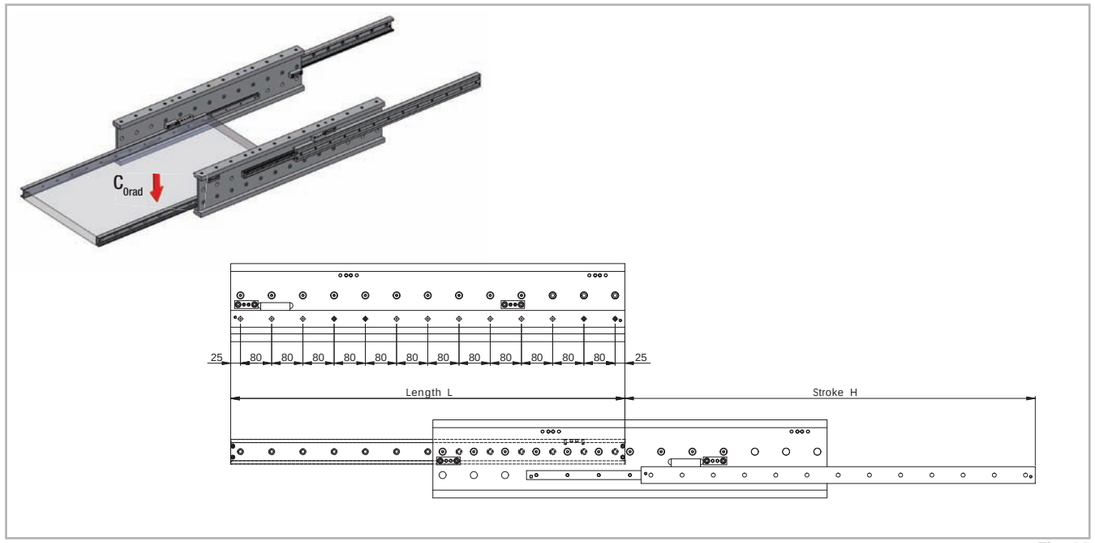

Fig. 62

Type	Size	Length L [mm]	Stroke H [mm]	Load capacity for a pair of rails C_{0rad} [N]	Fixed element Accessible holes / total	Movable element Accessible holes / total
DMS	63	1010	1051	16104	10 / 13	10 / 13
		1090	1141	17496	10 / 14	11 / 14
		1170	1216	19168	11 / 15	11 / 15
		1250	1291	20848	12 / 16	13 / 16
		1330	1381	22238	13 / 17	13 / 17
		1410	1456	23920	13 / 18	14 / 18
		1490	1531	25608	14 / 19	14 / 19
		1570	1621	26996	14 / 20	15 / 20
		1650	1696	28686	16 / 21	16 / 21
		1730	1771	30380	16 / 22	17 / 22
		1810	1861	31766	17 / 23	17 / 23
		1890	1936	33460	18 / 24	19 / 24
		1970	2026	34846	19 / 25	19 / 25
		2050	2101	36542	19 / 26	20 / 26
		2130	2176	38240	20 / 27	20 / 27
		2210	2266	39624	21 / 28	22 / 28

Tab. 47

DMS

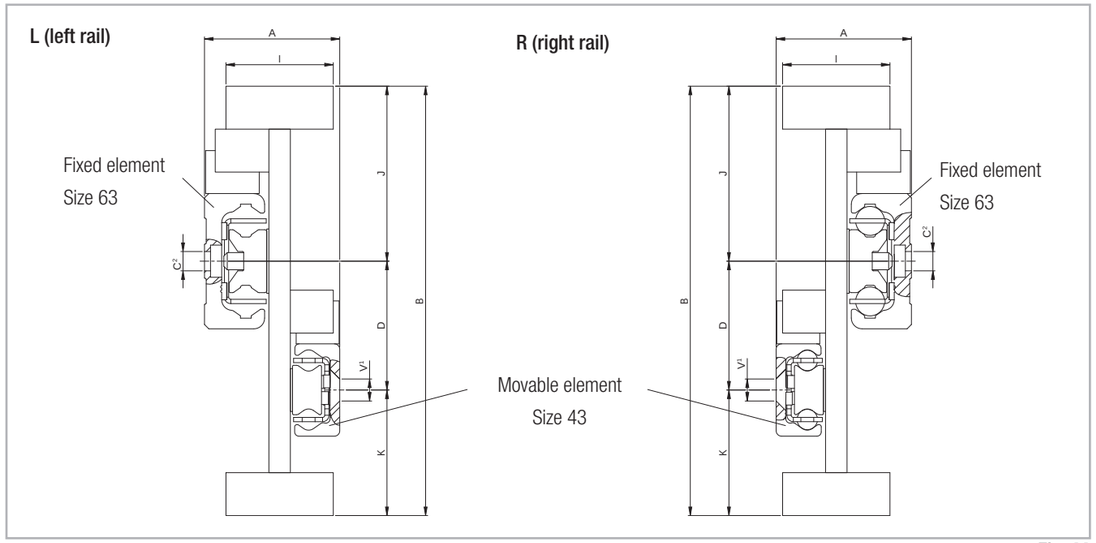

Fig. 63

[1] Fixing holes (V) for countersunk head screws according to DIN 7991
[2] Fixing holes (C) for socket cap screws according to DIN 7984. Alternative fixing with Torx® screws in special design with low head (on request)
Please observe right or left installation for version DMS.

Type	Size	Cross-section								Weight per single guide [kg/m]
		A [mm]	B [mm]	I [mm]	K [mm]	D [mm]	J [mm]	C	V	
DMS	63	63	200	50	58.5	60	81.5	M8	M8	43

Tab. 48

DRT

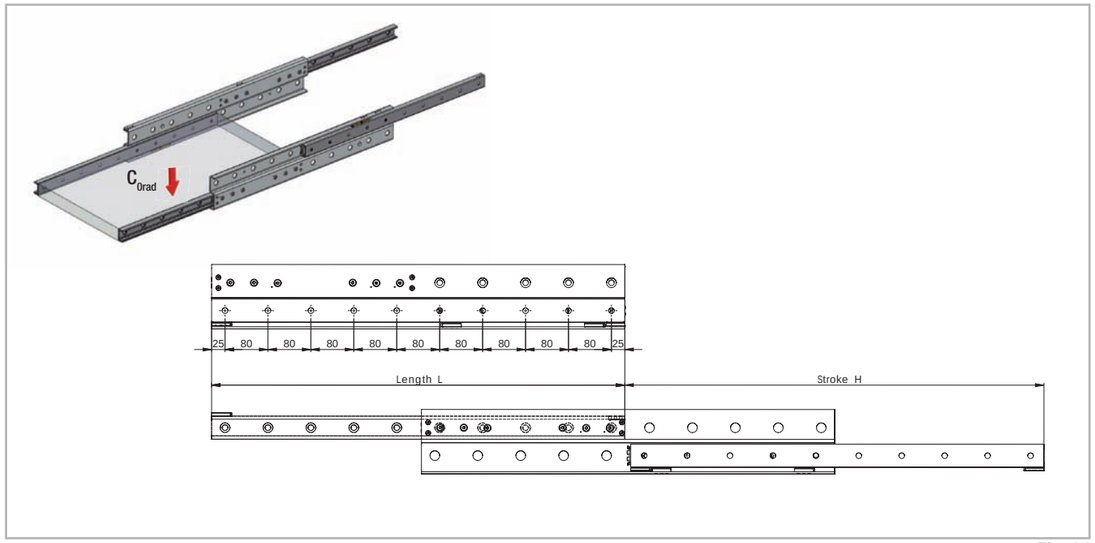

Fig. 64

Type	Size	Length L [mm]	Stroke H [mm]	Load capacity for a pair of rails C_{Orad} [N]	Accessible holes / total
DRT	28	450	464	705	6 / 6
		530	548	755	7 / 7
		610	630	795	8 / 8
		690	714	821	9 / 9
		770	798	842	10 / 10
		850	864	892	11 / 11
		930	950	899	12 / 12
		1010	1034	907	13 / 13
		1090	1118	915	14 / 14
		1170	1202	922	15 / 15

Tab. 49

Type	Size	Length L [mm]	Stroke H [mm]	Load capacity for a pair of rails C_{Orad} [N]	Accessible holes / total
DRT	43	770	780	4770	10 / 10
		850	860	4920	10 / 11
		930	940	5040	12 / 12
		1010	1020	5150	12 / 13
		1090	1100	5240	14 / 14
		1170	1180	5320	14 / 15
		1250	1260	5380	16 / 16
		1330	1340	5440	16 / 17
		1410	1420	5490	18 / 18
		1490	1500	5540	18 / 19
		1570	1580	5580	20 / 20
		1650	1660	5610	20 / 21
		1730	1740	5650	22 / 22
		1810	1820	5680	22 / 23
		1890	1900	5700	24 / 24
		1970	1980	5720	24 / 25

Tab. 50

DRT

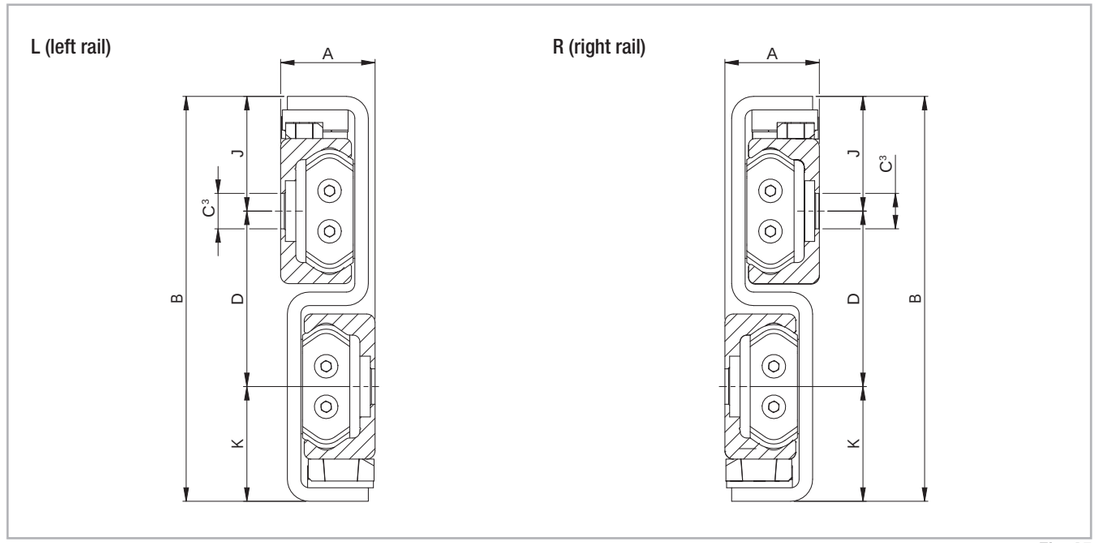

[3] For DRT43 fixing holes for Torx® screws in custom design with load head (included in scope of supply), DRT28 has contersunk holes. Please observe right or left installation for version DRT.

Fig. 65

Type	Size	Cross-section						Weight per single guide [kg/m]
		A [mm]	B [mm]	K [mm]	D [mm]	J [mm]	C	
DRT	28	17	84	24.5	35	24.5	M5*	5.0
	43	29	120	34	52	34	M8	11.20

* Contersunk screw.

Tab. 51

Technical instructions

Telescopic rail selection

Selecting the suitable telescopic rail should be done based on the load and the maximum permissible deflection in the extended state. The load capacity of a telescopic rail depends on two factors: the loading capacity of the ballcage and the rigidity of the intermediate element. For mainly short strokes the load capacity is determined by the load-bearing capacity of the ballcage; for average and long strokes it is determined by the rigidity of the intermediate element. Therefore series, which otherwise contain comparable components, are also suited for differing load capacities.

Static load check

The values in the load capacity tables of the corresponding series (see Sect. 4, Product Dimensions, pg. TR-8ff) give the maximum permissible loading of a pair of rails in the middle of the two rails and in the center line of the moving element with the rails in the completely extended state.

Using a pair of rails, the loading acts in the centre on both rails (see fig. 67, P1).
The load capacity of a rail pair is:

$$P_1 = C_{0rad}$$

Fig. 66

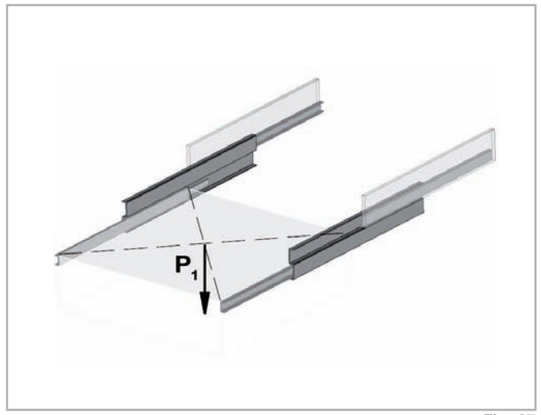

Fig. 67

Deflection

If the load P acts vertically on the pair of rails (see fig. 68), the expected elastic deflection in the extended state can be determined as follows:

$$f = \frac{q}{t} \cdot P \quad (mm)$$

Fig. 68

Whereby:
f is the expected elastic deflection in mm
q is a stroke coefficient (see fig. 71)
t is a factor depending on the model of the telescopic rail (see fig. 69)
P is the actual load acting on the centre of a pair of rails, in N
Also refer to page TR-40 for checking the static load

DS28	t = 360	DBN22	t = 6
DS35	t = 940	DBN28	t = 16
DS43	t = 1600	DBN35	t = 26
DS63	t = 8000	DBN43	t = 112
DE22	t = 16	DMS63	t = 7000
DE28	t = 34	DRT28	t = 360
DE35	t = 108	DRT43	t = 1600
DE43	t = 240	DSC43	t = 1600
DE63	t = 1080		

Fig. 69

This estimated value assumes an absolutely rigid adjacent construction. If this rigidity is not present, the actual deflection will deviate from the calculation.

Important:
With the partial extensions of the ASN series, the deflection is almost completely determined by the rigidity, i.e. by the moment of inertia of the adjacent construction.
For guides Series DSE please contact Rollon technical support.

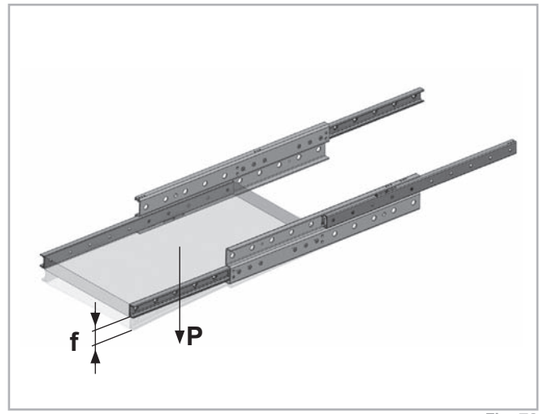

Fig. 70

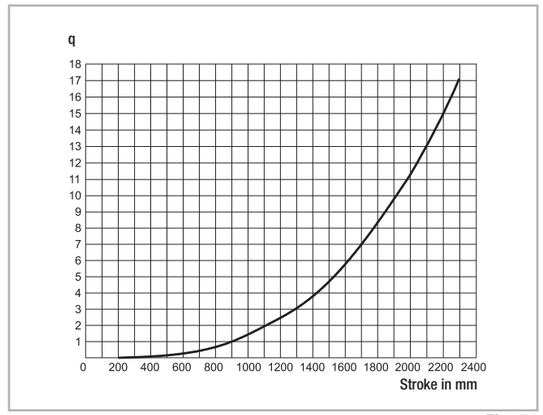

Fig. 71

Static load

The telescopic extension of the various series allow different forces and moments (see Sect. 4, Product dimensions, pg. TR-8ff).
During the static tests the radial load capacity, C_{0rad}, the axial load capacity, C_{0ax}, and moments M_x, M_y and M_z indicate the maximum permissible values of the loads; higher loads negatively effect the running properties and the mechanical strength. A safety factor, S_0, is used to check the static load, which takes into account the basic parameters of the application and is defined in more detail in the following table:

Safety factor S_0

Neither shocks nor vibrations, smooth and low-frequency reverse, high assembly accuracy, no elastic deformations	1.5
Normal installation conditions	1.5 - 2
Shocks and vibrations, high-frequency reverse, significant elastic deformation	2 - 3.5

Tab. 52

The ratio of the actual load to maximum permissible load may be as large as the reciprocal of the accepted safety factor, S_0, at the most.

$$\frac{P_{0rad}}{C_{0rad}} \le \frac{1}{S_0} \qquad \frac{P_{0ax}}{C_{0ax}} \le \frac{1}{S_0} \qquad \frac{M_1}{M_x} \le \frac{1}{S_0} \qquad \frac{M_2}{M_y} \le \frac{1}{S_0} \qquad \frac{M_3}{M_z} \le \frac{1}{S_0}$$

Fig. 72

The above formulas are valid for a single load case. If two or more of the described forces act simultaneously, the following check must be made:

$$\frac{P_{0rad}}{C_{0rad}} + \frac{P_{0ax}}{C_{0ax}} + \frac{M_2}{M_y} + \frac{M_3}{M_z} \le \frac{1}{S_0}$$

P_{0rad} = effective radial load
C_{0rad} = permissible radial load
P_{0ax} = effective axial load
C_{0ax} = permissible axial load
M_2 = effective moment in the y-direction
M_y = permissible moment in the y-direction
M_3 = effective moment in the z-direction
M_z = permissible moment in the z-direction

Fig. 73

Service life

The service life is defined as the time span between commissioning and the first sign of fatigue or wear indications on the raceways. The service life of a telescopic rail is dependent on several factors, such as the effective load, the installation precision, occurring shocks and vibrations, the operating temperature, the ambient conditions and the lubrication. Calculation of the service life is based exclusively on the loaded rows of balls.

In practice, the decommissioning of the bearing, due to its destruction or extreme wear of a component, represents the end of service life.
This is taken into account by an application coefficient (f_i in the formula below), so the service life consists of:

$$L_{km} = 100 \cdot \left(\frac{\delta}{W} \cdot \frac{1}{f_i}\right)^3$$

L_{km} = calculated service life in km
δ = load capacity factor in N
W = equivalent load in N for a pair of rails
f_i = application coefficient

Fig. 74

Application coefficient f_i

	ASN, DS, DE, DBN, DRT, DSC
Neither shocks nor vibrations, smooth and low-frequency direction change, clean environment	1.3 - 1.8
Light vibrations and average direction change	1.8 - 2.3
Shocks and vibrations, high-frequency direction change, very dirty environment	2.3 - 3.5

Tab. 53

If the external load, P, is the same as the dynamic load capacity, C_{0rad}, (which of course must never be exceeded), the service life at ideal operating conditions ($f_i = 1$) amounts to 100 km.
Naturally, for a single load P, the following applies: W= P. If several external loads occur simultaneously, the equivalent load is calculated as follows:

$$W = P_{rad} + \left(\frac{P_{ax}}{C_{0ax}} + \frac{M_2}{M_y} + \frac{M_3}{M_z}\right) \cdot C_{0rad}$$

Fig. 75

Load capacity factor δ

Length [mm]	ASN				
	22	28	35	43	63
	δ [N]				
130	830	1744			
210	1864	3154	3066	4576	
290	2590	5384	5812	8110	
370	3330	6810	7442	9588	
450	4410	8238	9074	13204	
530	5134	9664	11980	16902	
610	5872	11114	13606	20650	30006
690	6960	12542	15234	22010	35416
770	7684	13968	18186	25754	40854
850		16222	19806	29524	46310
930		17622	21428	30858	51778
1010		19048	24402	34620	57258
1090		20474	26018	35962	62748
1170		21900	27636	39720	68242
1250			30622	43494	73742
1330			32236	44822	79246
1410			33850	48590	84754
1490			36846	52372	90266
1570				56166	95780
1650				57466	101296
1730				61252	106814
1810				62562	112332
1890				66344	117854
1970				67658	123376

Tab. 54

Length [mm]	DS...				DSE				DSC
	28	35	43	63	28	35	43	63	43
	δ [N]								
290	1726				1084				
370	2328				1466				
450	2932	3784			1848	2390			
530	3536	5080	6240		2232	3224	3976		7194
610	4156	5756	7858	10656	2620	3650	5018	6690	8902
690	4762	6434	8394	12918	3004	4080	4792	8126	9322
770	5368	7762	10020	15208	3388	4934	6388	9578	11022
850	6360	8436	11672	17518	4028	5358	7452	11046	12746
930	6948	9110	12180	19842	4406	5784	7758	12526	13144
1010	7556	10452	13832	22178	4792	6650	8820	14012	15760
1090	8162	11122	15500	24522	5412	7072	9896	15504	16592
1170	8768	11794	15292	26874	5562	7496	10190	17002	17868
1250	9792	13146	17658	29232		8368	11264	18504	18702
1330	10386	13814	18154	31596		8790	11562	20010	19980
1410	10992	14484	19818	33962		9212	12632	15914	20818
1490	11612	15840	21492	36332		10088	13710	23028	23456
1570		16506	21976	38706			14096	24540	23826
1650		17176	23650	41080			15078	26056	24660
1730		18536	25330	43458			16160	27572	26394
1810			25808	45838			16444	29088	27824
1890			27486	48218			17526	30606	29408
1970			27966	50602			17814	32126	29770

Tab. 55

Length [mm]	DRT	DMS
	43	63
	δ [N]	
770	10320	
850	10612	
930	10848	
1010	11044	24308
1090	11210	29974
1170	11350	28914
1250	11472	32972
1330	11578	33526
1410	11672	39684
1490	11756	38570
1570	11830	44316
1650	11896	43196
1730	11956	49414
1810	12010	47822
1890	12060	51926
1970	12106	52450
2050		58682
2130		57526
2210		61190

Tab. 56

Length [mm]	DE... / DBN				DE
	22	28	35	43	63
	δ [N]				
130	330	714			
210	772	1310	1228	1846	
290	1074	2306	2422	3374	
370	1380	2912	3104	3948	
450	1850	3518	3784	5528	
530	2150	4126	5080	7160	
610	2458	4744	5756	8828	12406
690	2934	5350	6434	9322	14722
770	3232	5958	7762	10986	17054
850		6974	8436	12670	19398
930		7566	9110	13144	21750
1010		8172	10452	14822	24110
1090		8776	11122	16514	26476
1170		9382	11794	16978	28846
1250			13146	18664	31220
1330			13814	19136	33596
1410			14484	20818	35974
1490			15840	22510	38356
1570				24210	40738
1650				24660	43122
1730				26356	45508
1810				26812	47896
1890				28504	50284
1970				28966	52672

Tab. 57

Speed

The maximum operating speed is determined by the mass of the intermediate element, which moves with the movable rail. This reduces the maximum permissible operating speed with increasing length (see fig. 76).
Maximum acceleration: 1.2 m/s²

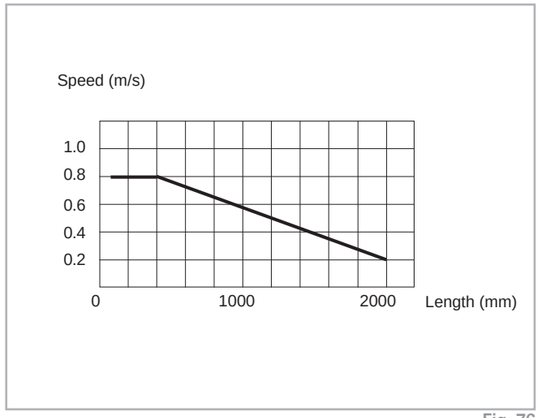

Fig. 76

Opening and closing force

The required actuation forces of a telescopic rail depend on the acting load and the deflection in the extended state. The force required for opening is principally determined by the coefficient of friction of the linear bearing. With correct assembly and lubrication, this is 0.01. During the extension, the force is reduced with the elastic deflection of the loaded telescopic rail. A higher force is required to close a telescopic extension, since, based on the elastic deflection, even if it is minimal, the movable rail must move against an inclined plane.

Double-sided stroke

For all designs allowing double-sided stroke, it must be noted that the position of the intermediate element is defined only in the extended state. In the extended state, the intermediate element can protrude by half of its length on each side. Exception is the ASN series, which comes out as a partial extension without an intermediate element and the custom design of series DE with driving disc.

The double-sided stroke in the ASN, DE and DBN series is achieved by removing the set screw. For the DSD series, the double-sided stroke is implemented by design adaptation. Double-sided stroke for series DMS on request. The DSB and DRT series are not available with double-sided stroke.

Temperature

- ASN, DE, DBN series can be used up to an ambient temperature of +170 °C (+338 °F). A lithium lubricant for high operating temperatures is recommended for temperatures above +130 °C (+266 °F). Minimum temperature with standard grease is -20 °C (-4 °F).
- The DS, DSE, DSC, DRT and DMS series have a useable range of -20 °C to +80 °C (-4 °F to +176 °F) due to of the rubber stop.
- The DSS43S and DE...S series have a temperature range of application from -20 ° C to + 50 ° C (-4 ° F to 122 ° F), due to the bumpers in special resin.

Anticorrosive protection

- All of our Telescopic Rail series have a standard anticorrosive protection by electrolytic galvanisation according to ISO 2081. If a higher resistance to corrosion is required, the guides are available with Rollon Aloy or chemical nickel treatment. For both versions stainless steel balls are provided.
- Numerous application-specific surface treatments are available upon request, e.g., FDA approved nickel plating for use in the food industry. For more information please contact Rollon technical support.

Lubrication

Recommended lubrication intervals are heavily dependent upon the ambient conditions, speed and temperature. Under normal conditions, lubrication is recommended after 100 km operational performance or after an operating period of six months. In critical application cases the interval should be shorter. Please clean the raceways carefully before lubricating. Raceways and spaces of the ball cage are lubricated with a lithium lubricant of average consistency (roller bearing lubricant).

Different lubricants are available on request for special applications:

- FDA-approved lubricant for use in the food industry
- specific lubricant for clean rooms
- specific lubricant for the marine technology sector
- specific lubricant for high and low temperatures

For specific information, contact Rollon technical support.

Clearance and preload

Telescopic Rail guides are mounted as standard with no play. For more information, please contact Rollon technical support.

Preload classes		
Increased clearance	No clearance	Increased preload
G_1	Standard	K_1

Tab. 58

** for higher preload, contact Rollon technical support.*

Fixing screws

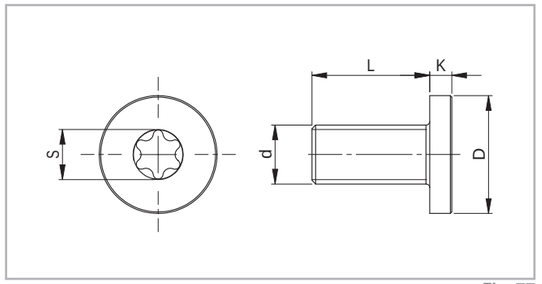

Fig. 77

The DRT 43 telescopic rail must be fixed with a custom designed Torx® screws with low cap head. The screws are included in the scope of supply. All other rails are fixed with counter-sunk or cap head screws as per DIN 7991 or 7984. In size 63 of the ASN and DMS series, Torx® screws with low head cap screws are available on request (see fig. 77).

Size	Screw type	d	D [mm]	L [mm]	K [mm]	S
63	M8 x 20	M8 x 1.25	13	20	5	T40
43	M8 x 16	M8 x 1.25	16	16	3	

Tab. 59

Recommended Standard fixing screw tightening torques

Property class	Size	Tightening torque [Nm]
10.9	22	3
	28	6
	35	10
	43	25
	63	30

Tab. 60

Prepare a sufficient bevel on the threaded fixing holes, according to the following table:

Size	Bevel (mm)
22	0.5 x 45°
28	1 x 45°
35	1 x 45°
43	1 x 45°
63	1 x 45°

Tab. 61

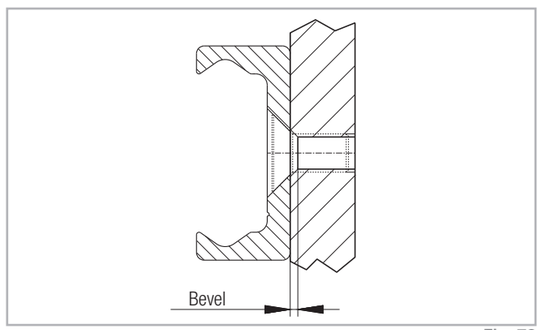

Fig. 78

Installation instructions

In general and for ASN, DBN, DE, DMS, DRT, DSB, DSE

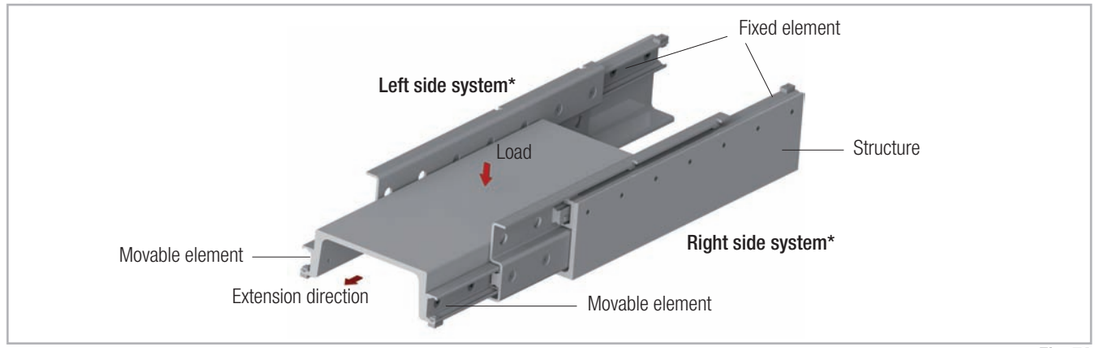

* For models DMS, DRT, DSB, and DSE, please observe right or left side use

Fig. 79

General

- Internal stops are used to stop the unloaded slider and the ball cage. Please use external stops as end stops for a loaded system.
- To achieve optimum running properties, high service life and rigidity, it is necessary to fix the telescopic rails with all accessible holes on a rigid and level surface.
- In order to reach all mounting holes for the ASN, DEV, DEM and DBN series it is necessary to remove the locking screw in the rail during assembly and then to reinsert it afterwards.
- Please observe the parallelism of the installation surfaces. The fixed and movable rails fit to the rigid assembly construction.
- Telescopic Rail guides are suitable for continuous use in automatic systems. For this, the stroke should remain constant in all moving cycles and the operating speed must be checked (see pg. TR-44, fig. 76). The movement of the telescopic rails is enabled by internal ballcages, which could experience an offset from the original position with differing strokes. This phase offset can have a negative effect on the running properties or limit the stroke. If differing strokes occur in an application, the drive force must be sufficiently dimensioned in order to appropriately synchronise the ballcage offset. Otherwise, an additional maximum stroke must be planned regularly to ensure the correct position of the ballcage.

ASN

- Series ASN accepts radial and axial loads and moments in all principle directions.
- Horizontal and vertical application is possible. Prior to vertical installation, we recommend contacting Rollon technical support.
- The installation of two partial extensions on a profile provides a load capable full extension. For individual solutions, please contact Rollon technical support.

DE / DBN

- Series DE and DBN accept radial and axial loads.
- Horizontal and vertical application is possible. Prior to vertical installation, we recommend you contact Rollon technical support.
- The functionality of custom design DE...D is only guaranteed if the stroke available is completely used.

DS / DSE / DMS / DRT

- Series DS, DES, DMS and DRT accept radial loads. This should act in the vertical cross-sectional axis on the movable rails.
- Horizontal and vertical application is possible. Prior to vertical installation, we recommend you contact Rollon technical support.
- When installing make sure that the load is placed on the movable element (the lower rail) (see fig. 79).
  The opposite assembly negatively affects the function.
- Installation must be done on a rigid structure using all accessible fixing holes.
- Pay attention to the parallel alignment during assembly with paired application.

Installation instructions

For DSC

DSC system in retracted state

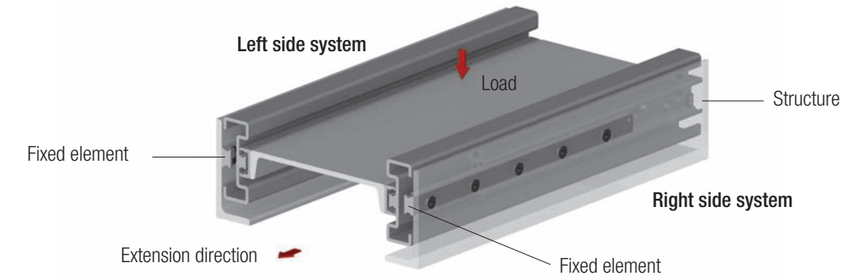

DSC system in extended state

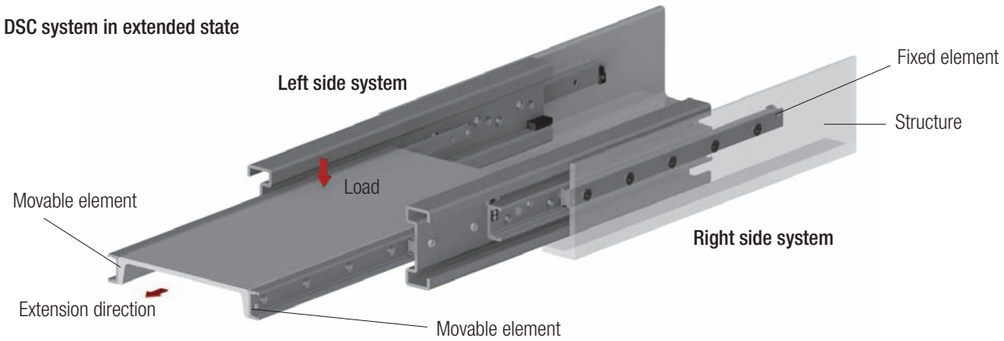

Fig. 80

DSC

- The DSC series absorbs radial and axial loads, in which case radial load directions are preferable.
- Horizontal and vertical use is possible. Prior to vertical installation we recommend inspection by the application engineers.
- During installation make sure that the load is mounted on the movable element (see Fig. 80). Reverse installation will impair proper functioning.
- The installation must be performed on a rigid structure, using all accessible mounting holes.
- Important: The length of the slider (fixed element) is different from the system length. See Table 23 on page TR-21 for DSC load ratings. The table also provides information on the accessible mounting holes.
- Important: The slide (fixed element) must be mounted in the front position when the system is retracted in order to achieve the entire stroke.
- Make sure the elements are aligned parallel during mounting.

Ordering key

Telescopic rails

DSB	**28**	**690**	**885**	**L**	**NIC**
					Expanded surface protection is deviation from standard (ISO 2081) *see pg. TR-45, Anticorrosive protection*
				Right (R) or left (L) version (only for series DMS, DRT, DSB, DSE) *see pg. TR-7 Remarks*	
			Stroke, if deviating from standard stroke (catalogue data) *see pg. TR-8ff Product dimensions and Ordering key for special strokes*		
		Length	*see pg. TR-8ff Product dimensions*		
	Size	*see pg. TR-8ff Product dimensions*			
Product type	*see pg. TR-8ff Product dimensions*				

Ordering example 1: ASN35-0770

Ordering example 2: DSB28-0690-0885-L-NIC

Ordering example 3 (rail DE...D): DEF28D-0690

Notes on ordering: Information for right and left side installation and for expanded surface protection is only necessary if required.

Rail lengths and stroke lengths are always stated with 4 digits. Please pad with zeroes to fill in for lengths with less than 4 digits, e.g. 515mm length is “0515”

Special strokes

Special strokes are defined as deviations from standard stroke H. They are each available as multiples of the values in tab. 62 and 63.

These values are dependent on the spacing of the ballcage.

Type	Size	Stroke modification [mm]
ASN	22	7.5
	28	9.5
	35	12
	43	15
	63	20

Tab. 62

Stroke modification of series DMS on request.

No stroke modification is possible for the DSD, DSC and DRT series. Each stroke modification influences the load capacities stated in the catalogue. It is possible that after a stroke modification important fastening holes might no longer be accessible. For more information please contact Rollon technical support.

Type	Size	Stroke modification [mm]
DSS DE DBN	22	15
	28	19
	35	24
	43	30
	63	40
DE...S	35	22
DSE	28	28.5
	35	36
	43	45
	63	60

Tab. 63

Notes

Notes

ROLLON®

Linear Evolution

Hegra Rail

Product explanation

Partial and full extension guides of different types

Fig. 1

The Hegra Rail product family consists of five product categories: partial, fully extending, overextending and heavy-duty rails as well as S-profiles. Different versions in the single categories, such as design or materials, also provide for increased customer benefits.

The most important characteristics:

- High load capacity and minimal deflection
- Different versions and materials
- Compact design
- Lightweight; smooth operation
- Long life
- High functional reliability

Preferred applications:

- Rail vehicles (maintenance and battery compartments)
- Motor vehicle technology
- Construction and machine technology
- Special purpose machinery

Partial extension guides

Partial extension guides with a stroke of more than 50 % of the closed telescoping length, consisting of one guide rail and one slider. The high system rigidity is achieved here in combination with the connection construction.

Fig. 2

Full extension guides

Full extension guides with strokes of about 100 % of the closed length consisting of three elements in different designs and sizes.

Fig. 3

Overextending guides

Overextending guides with a stroke of up to 200 % of the closed telescoping length. The use of intermediate elements with a high moment of inertia achieves excellent system rigidity and a high load capacity in fully extended systems.

Fig. 4

Heavy load extension guides

Full extension guides with strokes of about 100 % of the length consist of a solid, double T-shaped intermediate element and the two corresponding sliders. This full extension guide was specially designed for extremely heavy loads with minimal deflection and high system rigidity.

Fig. 5

S-profiles

Full extension guides with strokes of about 100 % of the closed length consisting of two guide rails and one S-shaped intermediate element.
The advantages of the full extension guide are high rigidity and a compact design.

Fig. 6

Overview product cross sections

Partial extension guides

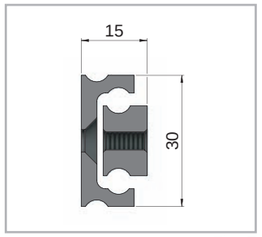

Fig. 7

HTT030

Load capacities p. HR-10

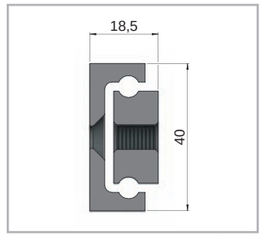

Fig. 8

HTT040

Load capacities p. HR-11

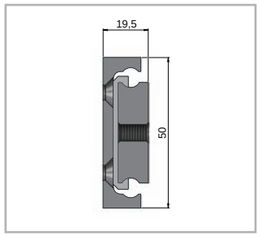

Fig. 9

HTT050

Load capacities p. HR-12

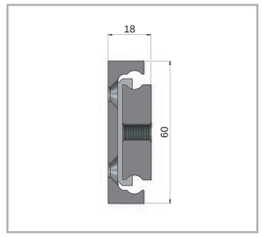

Fig. 10

HTT060

Load capacities p. HR-13

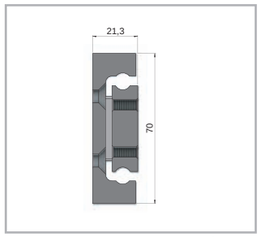

Fig. 11

HTT070

Load capacities p. HR-14

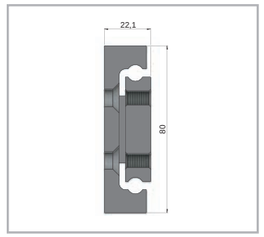

Fig. 12

HTT080

Load capacities p. HR-15

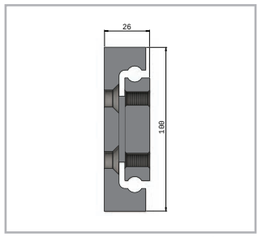

Fig. 13

HTT100

Load capacities p. HR-15

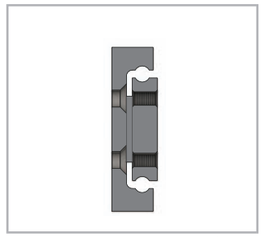

Fig. 14

HTT120, HTT150

Versions are available on request

Load capacities p. HR-16

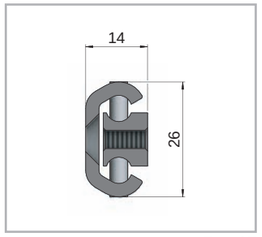

Fig. 15

HTC026

Load capacities p. HR-18

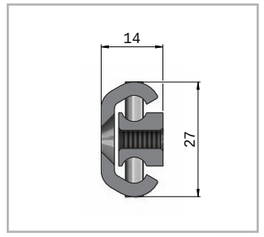

Fig. 16

HTCX026

Load capacities p. HR-18

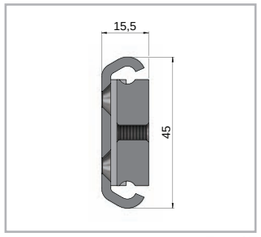

Fig. 17

HTC045

Load capacities p. HR-19

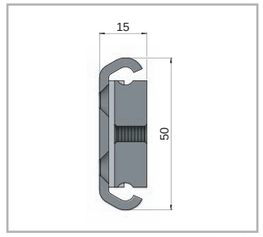

Fig. 18

HTC50

Load capacities p. HR-20

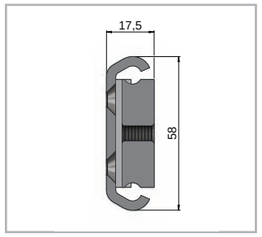

Fig. 19

HTC058

Load capacities p. HR-20

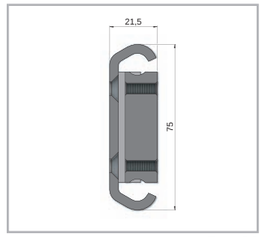

Fig. 20

HTC075

Load capacities p. HR-21

Full extension guides

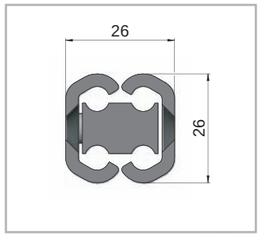

Fig. 21

HVB026

Load capacities p. HR-23

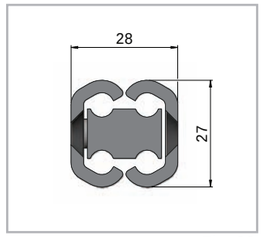

Fig. 22

HVBX026

Load capacities p. HR-23

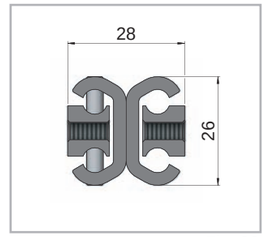

Fig. 23

HVD026

Load capacities p. HR-25

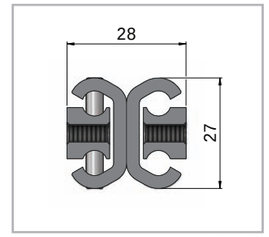

Fig. 24

HVDX026

Load capacities p. HR-25

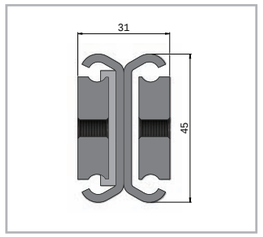

Fig. 25

HVD045

Load capacities p. HR-26

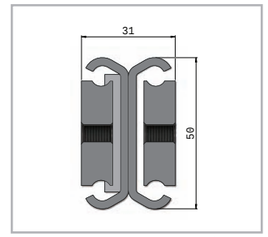

Fig. 26

HVD050

Load capacities p. HR-27

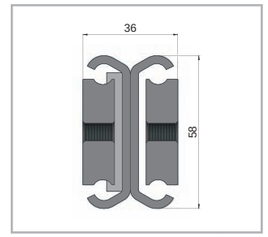

Fig. 27

HVD058

Load capacities p. HR-28

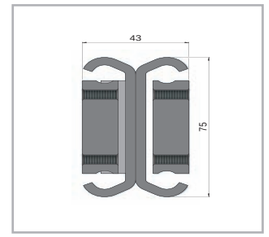

Fig. 28

HVD075

Load capacities p. HR-29

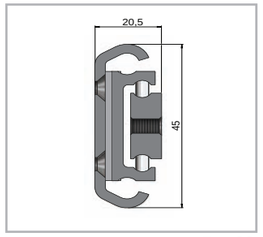

Fig. 29

HVC045

Load capacities p. HR-31

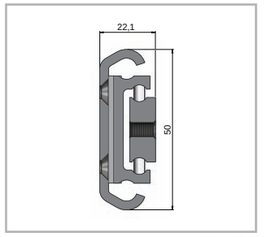

Fig. 30

HVC050

Load capacities p. HR-32

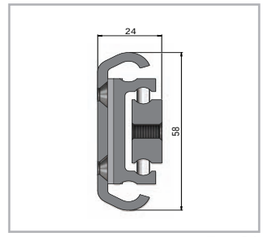

Fig. 31

HVC058

Load capacities p. HR-33

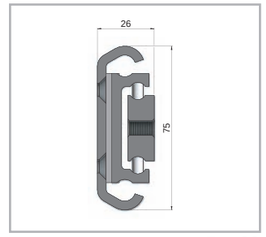

Fig. 32

HVC075

Load capacities p. HR-34

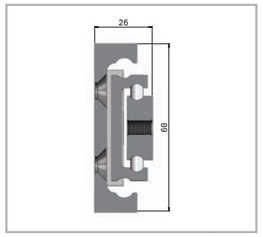

Fig. 33

HVT060

Load capacities p. HR-36

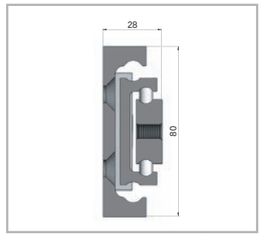

Fig. 34

HVT080

Load capacities p. HR-37

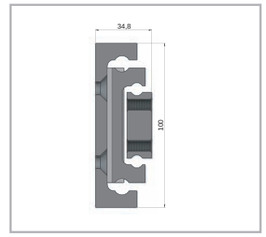

Fig. 35

HVT100

Load capacities p. HR-38

Overextending guides

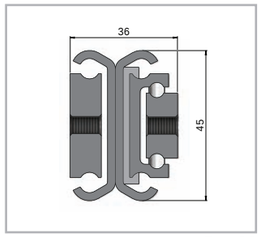

Fig. 36

H1D045

Load capacities p. HR-40

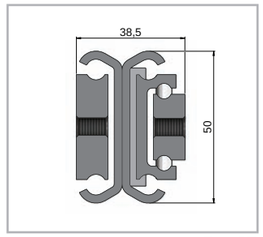

Fig. 37

H1D050

Load capacities p. HR-41

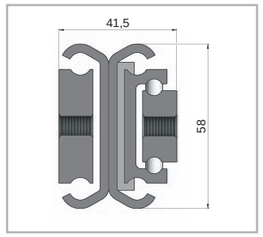

Fig. 38

H1D058

Load capacities p. HR-41

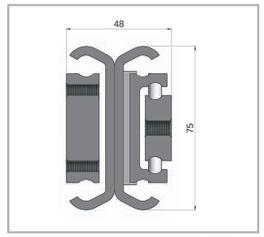

Fig. 39

H1D075

Load capacities p. HR-42

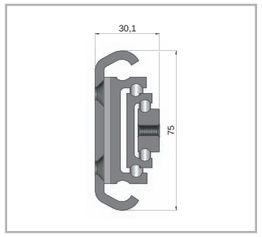

Fig. 40

H1C075

Load capacities p. HR-44

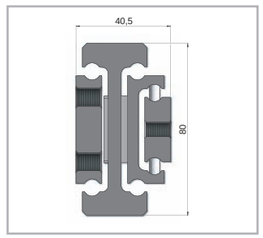

Fig. 41

H1T060

Load capacities p. HR-46

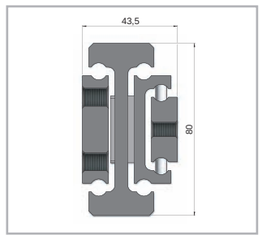

Fig. 42

H1T080

Load capacities p. HR-47

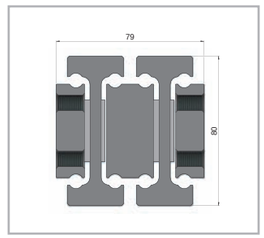

Fig. 43

H2H080

Load capacities p. HR-56

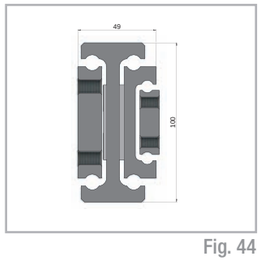

Fig. 44

H1T100

Load capacities p. HR-48

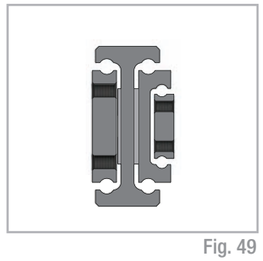

Fig. 49

H1T150

Versions are available on request

Load capacities p. HR-54

Heavy load extension guides

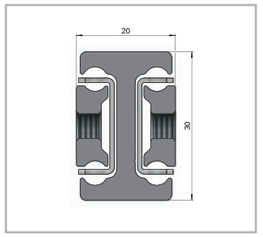

Fig. 46

LTH30

Load capacities p. HR-52

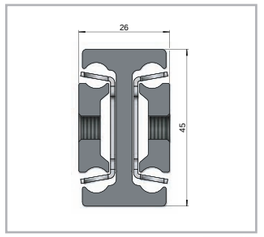

Fig. 47

LTH45

Load capacities p. HR-55

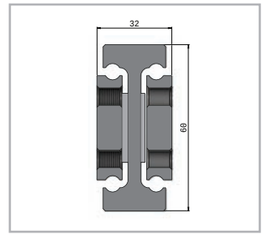

Fig. 48

HGT060

Load capacities p. HR-59

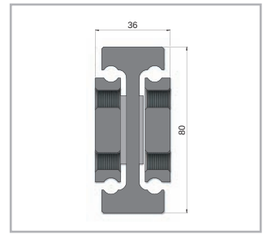

Fig. 49

HGT080

Load capacities p. HR-60

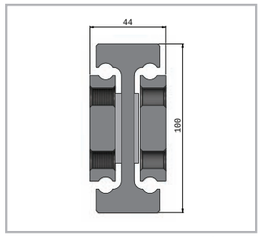

Fig. 50

HGT100

Load capacities p. HR-61

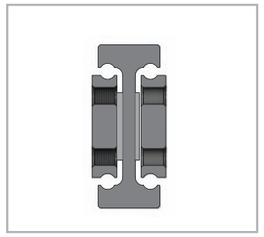

Fig. 51

HGT120, HGT150, HGT200, HGT240

Versions are available on request

Load capacities p. HR-61

S-profiles

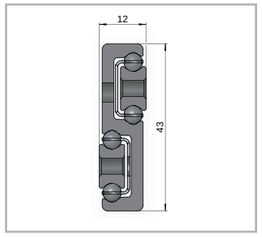

Fig. 52

LTF44

Load capacities p. HR-69

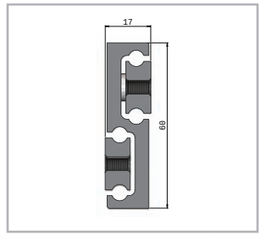

Fig. 53

HGS060

Load capacities p. HR-71

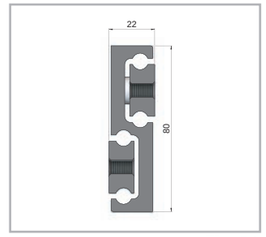

Fig. 54

HGS080

Load capacities p. HR-72

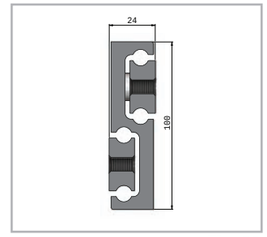

Fig. 55

HGS100

Load capacities p. HR-72

Technical data

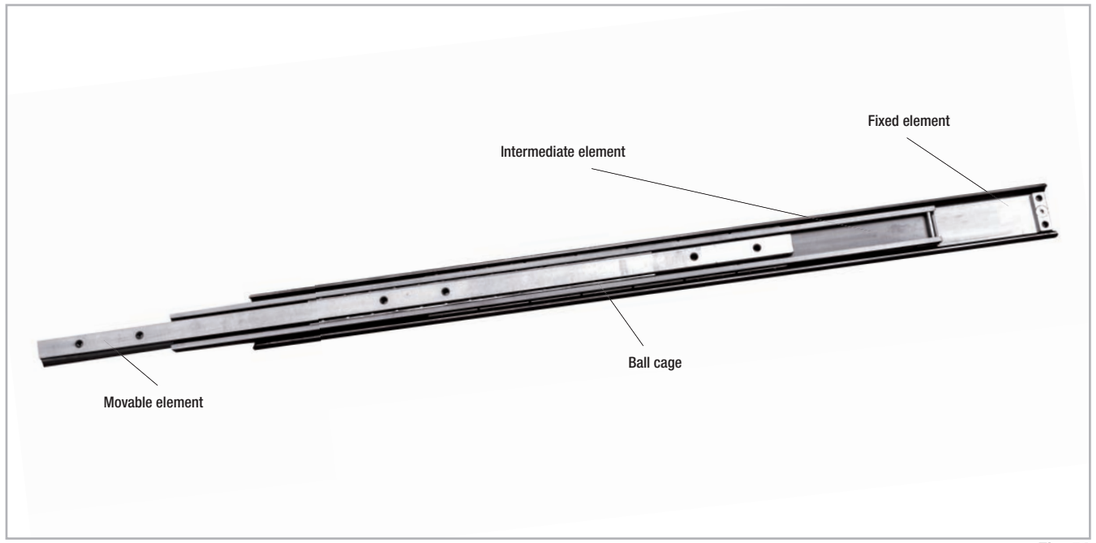

Fig. 56

Performance characteristics:

- Temperature range: 0 °C to +170 °C (32 °F to +338 °F)
  (in exceptions also -30 °C to +250 °C (-22 °F to +482 °F))
- Max. operating speed 0.8 m/s (depending on the application)
- Different materials and anti-corrosion coatings are available
- Special solutions, such as locking mechanisms, catches, damping elements or are available on request

Attention!
The load capacity for aluminum is 40 % and for stainless steel 60 % of the stated values, if available in this material variant.

Notes:

- Horizontal installation is recommended
- Vertical installation on request
- Special strokes on request
- All load capacities refer to one telescopic pair
- Mounting screws with a strength class of 10.9 must be used for all telescopic rails
- Internal stops are provided to stop the sliders when not under load and the ball cage. Please use external stops as limit stops for a system under load
- Not all accessories (interlocks, damping, drive disk, snap) can be combined with each other. Please contact our technical service.
- For models HGT with locking please observe right or left side use.
- Temperature range: LTH und LTF
  -20 °C to +170 °C (-22 °F to +338 °F)
- Temperature range: LTH ...S
  -20 °C to +50 °C (-22 °F to +122 °F)
- Telescopic guides made of aluminum or stainless steel are standard without greasing. If a greasing is desired, it must be stated separately at the order.
- Please note eventualy dimensional variations in use of stainless steel. Please contact our technical service.

Load capacities and dimensions

HTT030

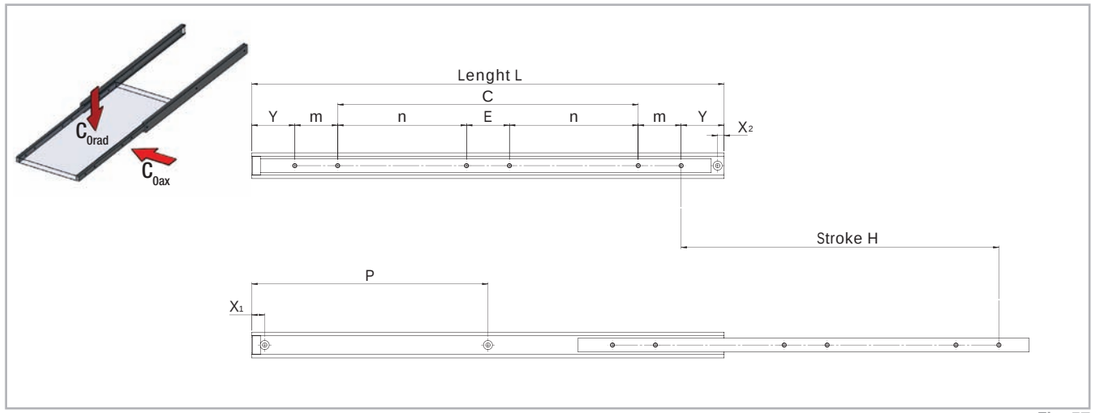

All dimensions are indicated in mm

Fig. 57

Type	Size	Length L [mm]	Stroke H [mm]	Load capacity per pair C_{0rad} [N]	Load capacity per pair C_{0ax} [N]	X1	X2	Y	m	n	E	C	P	Number of holes
HTT	30	250	130	1100	70 % C_{0rad}	15	7.5	50	50	-	-	50	125	4
		300	180	1200								100	150	
		350	230	1150								150	175	
		400	260	1100								200	200	
		450	310	1050								250	225	
		500	340	1000								300	250	
		550	370	950						150	50	-	275	6
		600	400	900						175			300	
		650	430	850						200			325	
		700	460	800						225			350	
		750	490	750						250			375	
		800	520	700						275			400	
		850	550	650						300			425	
		900	600	600						325			450	
		950	630	550						350			475	
		1000	660	500						375			500	

The load capacity for aluminum is 40% and for stainless steel 60% of the stated values, if available in this material variant (see Technical features overview).

Tab. 1

HTT040

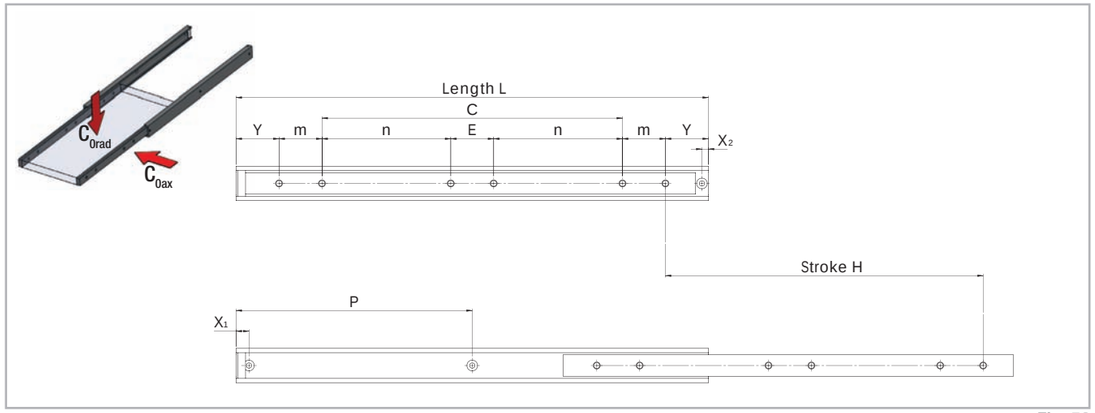

All dimensions are indicated in mm

Fig. 58

Type	Size	Length L [mm]	Stroke H [mm]	Load capacity per pair C_{0rad} [N]	Load capacity per pair C_{0ax} [N]	X1	X2	Y	m	n	E	C	P	Number of holes
HTT	40	250	130	2100	70 % C_{0rad}	15	7.5	50	50	-	-	50	125	4
		300	180	2250								100	150	
		350	230	2350								150	175	
		400	260	2450								200	200	
		450	310	2550								250	225	
		500	340	2500								300	250	
		550	370	2450						150	50	-	275	6
		600	400	2400						175			300	
		650	430	2350						200			325	
		700	460	2300						225			350	
		750	490	2250						250			375	
		800	520	2150						275			400	
		850	550	2050						300			425	
		900	600	1950						325			450	
		950	630	1800						350			475	
		1000	660	1650						375			500	

The load capacity for aluminum is 40 % and for stainless steel 60 % of the stated values, if available in this material variant (see Technical features overview).

Tab. 2

HTT050, HTT060

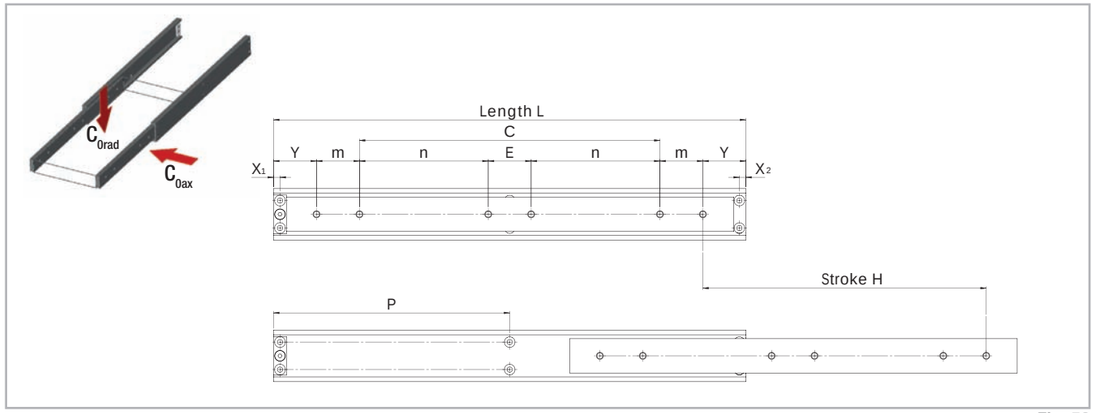

All dimensions are indicated in mm

Fig. 59

Type	Size	Length L [mm]	Stroke H [mm]	Load capacity per pair C_{0rad} [N]	Load capacity per pair C_{0ax} [N]	X1	X2	Y	m	n	E	C	P	Number of holes
HTT	50	300	180	2500	70 % C_{0rad}	15	7.5	50	50	-	-	100	150	4
		350	230	2600								150	175	
		400	260	2700								200	200	
		450	310	2800								250	225	
		500	340	2900								300	250	
		550	370	2850						150	50	-	275	6
		600	400	2800						175			300	
		650	430	2700						200			325	
		700	460	2600						225			350	
		750	490	2500						250			375	
		800	520	2400						275			400	
		850	550	2300						300			425	
		900	600	2200						325			450	
		950	630	2100						350			475	
		1000	660	2000						375			500	
		1100	690	1850						425			525	
		1200	720	1650						475			550	

The load capacity for aluminum is 40 % and for stainless steel 60 % of the stated values, if available in this material variant (see Technical features overview).

Tab. 3

Type	Size	Length L [mm]	Stroke H [mm]	Load capacity per pair C_{0rad} [N]	Load capacity per pair C_{0ax} [N]	X1	X2	Y	m	n	E	C	P	Number of holes
HTT	60	300	180	3200	70 % C_{0rad}	7.5	7.5	50	50	-	-	100	150	4
		350	210	3250								150	175	
		400	240	3300								200	200	
		450	270	3350								250	225	
		500	300	3400								300	250	
		550	330	3350						150	50	-	275	6
		600	360	3300						175			300	
		650	390	3250						200			325	
		700	420	3200						225			350	
		750	450	3100						250			375	
		800	480	3000						275			400	
		850	510	2900						300			425	
		900	540	2800						325			450	
		950	570	2700						350			475	
		1000	600	2600						375			500	
		1100	660	2450						425			550	
		1200	720	2250						475			600	
		1300	780	2050						525			650	
		1400	840	1900						575			700	
		1500	900	1700						625			750	

The load capacity for aluminum is 40 % and for stainless steel 60 % of the stated values, if available in this material variant (see Technical features overview).

Tab. 4

HTT070, HTT080, HTT100, HTT120, HTT150

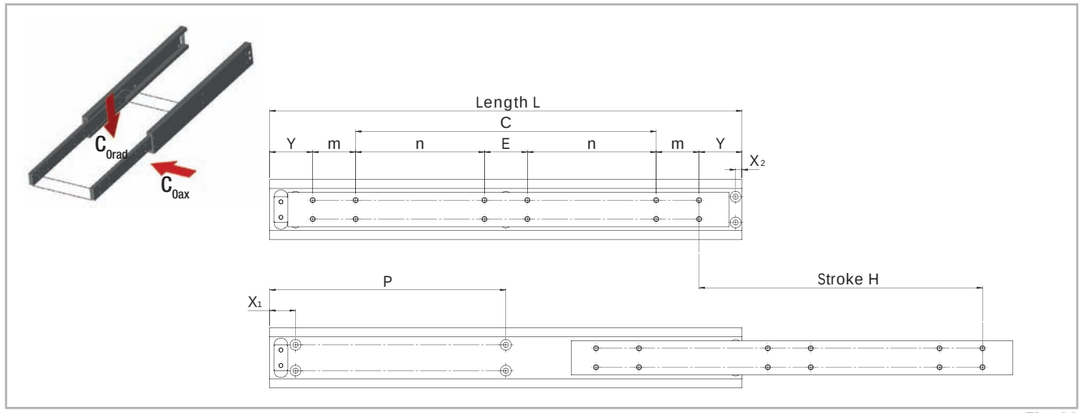

All dimensions are indicated in mm

Fig. 60

Type	Size	Length L [mm]	Stroke H [mm]	Load capacity per pair C_{0rad} [N]	Load capacity per pair C_{0ax} [N]	X1	X2	Y	m	n	E	C	P	Number of holes
HTT	70	500	300	4200	70 % C_{0rad}	30	7.5	50	50	150	50	300	250	8
		550	330	4150									275	12
		600	360	4100						175			300	
		650	390	4050						200			325	
		700	420	4000						225			350	
		750	450	3900						250			375	
		800	480	3800						275			400	
		850	510	3700						300			425	
		900	540	3600						325			450	
		950	570	3450						350		-	475	
		1000	600	3300						375			500	
		1100	660	3100						425			550	
		1200	720	2900						475			600	
		1300	780	2700						525			650	
		1400	840	2400						575			700	
		1500	900	2100						625			750	
		1600	960	1800						675			800	
		1700	1020	1500						725			850	

The load capacity for aluminum is 40 % and for stainless steel 60 % of the stated values, if available in this material variant (see Technical features overview).

Tab. 5

Type	Size	Length L [mm]	Stroke H [mm]	Load capacity per pair C_{0rad} [N]	Load capacity per pair C_{0ax} [N]	X1	X2	Y	m	n	E	C	P	Number of holes
HTT	80	500	300	4800	70 % C_{0rad}	35	15	100	100	-	-	100	250	8
		550	330	4900								150	275	
		600	360	5000								200	300	
		650	390	4900								250	325	
		700	420	4800								300	350	
		750	450	4700								350	375	
		800	480	4600								400	400	
		850	510	4500								450	425	
		900	540	4400								500	450	
		950	570	4250								550	475	
		1000	600	4100								600	500	
		1100	660	3800						300			550	
		1200	720	3500						350			600	
		1300	780	3200						400			650	
		1400	840	2900						450	100	-	700	12
		1500	900	2600						500			750	
		1600	960	2300						550			800	
		1700	1020	2000						600			850	
HTT	100	700	420	9000	70 % C_{0rad}	35	12	100	200	-	-	100	350	8
		750	450	9500								150	375	
		800	480	10000								200	400	
		850	510	9750								250	425	
		900	540	9500								300	450	
		950	570	9250								350	475	
		1000	600	9000								400	500	
		1100	660	8500						150			550	
		1200	720	8000						200			600	
		1300	780	7500						250			650	
		1400	840	6900						300			700	
		1500	900	6300						350	200	-	750	12
		1600	960	5700						400			800	
		1700	1020	5100						450			850	
		1800	1080	4500						500			900	
		1900	1140	3900						550			950	
		2000	1200	3300						600			1000	

The given load capacity for aluminum is 40 % and for stainless steel 60 % of the stated values, if available in this material variant (see Technical features overview).

Tab. 6

Other sizes and versions are available on request

Type	Size	Length L [mm]	Load capacity per pair C_{0rad} [N]	Load capacity per pair C_{0ax} [N]
HTT	120	700	11500	70 % C_{0rad}
		⋮	⋮	
		2000	4700	
HTT	150	700	14500	70 % C_{0rad}
		⋮	⋮	
		2000	6400	

Tab. 7

The given load capacity for aluminum is 40 % and for stainless steel 60 % of the stated values, if available in this material variant (see Technical features overview).

HTT

HTT030

HTT040

HTT050
HTT060

HTT070
HTT080
HTT0100

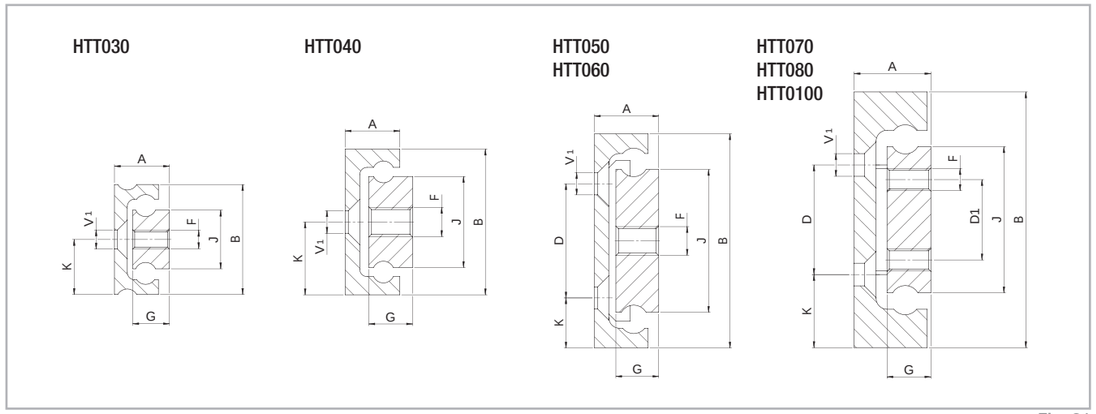

All dimensions are indicated in mm

[1] Mounting holes (V) for countersunk screws according to DIN 7991/ISO 10642

Fig. 61

Type	Size	A	B	J	G	K	D	D1	F	V1	Weight per single guide [kg/m]
HTT	30	15	30	16	10	15	-	-	M6	M5	2.4
	40	18.5	40	25	12	20			M8	M6	4.3
	50	19.5	50	30		12.5	25				5.6
	60	18	60	40		14	32				7.7
	70	21.3	70	40		20	30	22	M6		9.3
	80	22.1	80	50		25		30	M8	M8	10.4
	100	26	100	70	15	27.5	45	45	M10		17

Tab. 8

HTC026

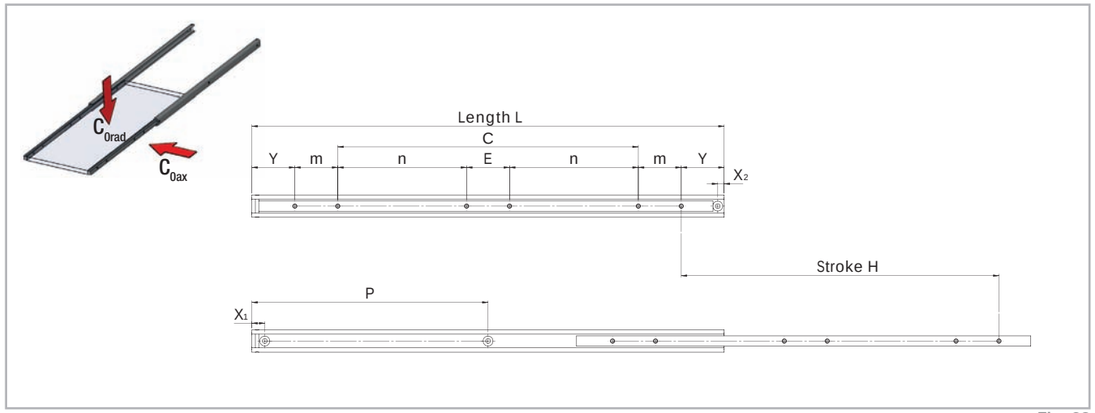

All dimensions are indicated in mm

Fig. 62

Type	Size	Length L [mm]	Stroke H [mm]	Load capacity per pair C_{0rad} [N]	Load capacity per pair C_{0ax} [N]	X1	X2	Y	m	n	E	C	P	Number of holes
HTC	26	250	130	700	60 % C_{0rad}	15	7.5	50	50	-	-	50	125	4
		300	180	750								100	150	
		350	230	750								150	175	
		400	260	700								200	200	
		450	310	650								250	225	
		500	340	600								300	250	
		550	370	550						150	50	-	275	6
		600	400	500						175			300	
		650	430	450						200			325	
		700	460	400						225			350	
		750	490	350						250			375	
		800	520	300						275			400	
		850	550	250						300			425	
		900	600	220						325			450	
		950	630	200						350			475	
		1000	660	180						375			500	

The load capacity for aluminum is 40 % and for stainless steel 60 % of the stated values, if available in this material variant (see Technical features overview).

Tab. 9

HTC045, HTC050, HTC058

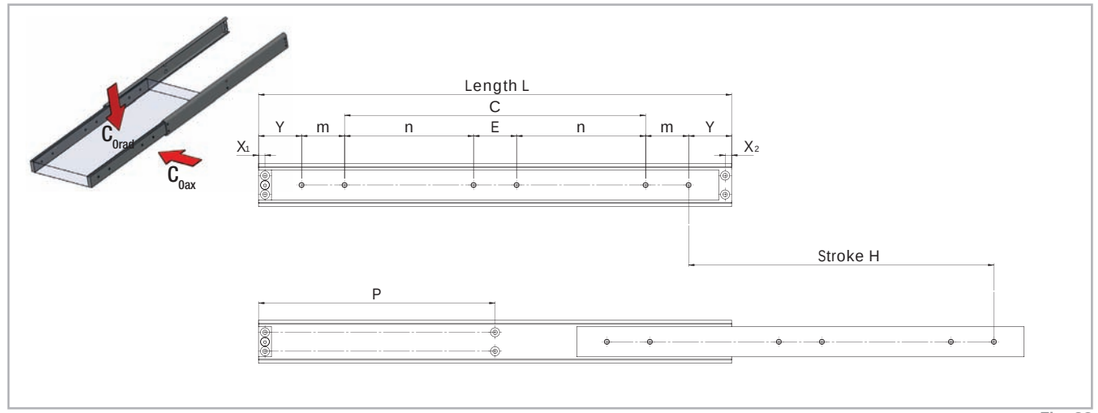

All dimensions are indicated in mm

Fig. 63

Type	Size	Length L [mm]	Stroke H [mm]	Load capacity per pair C_{0rad} [N]	Load capacity per pair C_{0ax} [N]	X1	X2	Y	m	n	E	C	P	Number of holes
HTC	45	300	180	1250	60 % C_{0rad}	7.5	7.5	50	50	-	-	100	150	4
		350	230	1300								150	175	
		400	260	1250								200	200	
		450	310	1200								250	225	
		500	340	1150								300	250	
		550	370	1100						150	50	-	275	6
		600	400	1050						175			300	
		650	430	1000						200			325	
		700	460	950						225			350	
		750	490	900						250			375	
		800	520	850						275			400	
		850	550	800						300			425	
		900	600	750						325			450	
		950	630	700						350			475	
		1000	660	650						375			500	
		1100	720	550						425			550	
		1200	800	450						475			600	

The load capacity for aluminum is 40 % and for stainless steel 60 % of the stated values, if available in this material variant (see Technical features overview).

Tab. 10

Type	Size	Length L [mm]	Stroke H [mm]	Load capacity per pair C_{0rad} [N]	Load capacity per pair C_{0ax} [N]	X1	X2	Y	m	n	E	C	P	Number of holes
HTC	50	300	180	1500	60 % C_{0rad}	7.5	7.5	50	50	-	-	100	150	4
		350	230	1600								150	175	
		400	260	1700								200	200	
		450	310	1800								250	225	
		500	340	1750								300	250	
		550	370	1700						150	50	-	275	6
		600	400	1650						175			300	
		650	430	1600						200			325	
		700	460	1550						225			350	
		750	490	1450						250			375	
		800	520	1350						275			400	
		850	550	1250						300			425	
		900	600	1150						325			450	
		950	630	1050						350			475	
		1000	660	950						375			500	
		1100	720	750						425			550	
		1200	800	550						475			600	
HTC	58	300	180	2200	60 % C_{0rad}	7.5	7.5	50	50	-	-	100	150	4
		350	230	2300								150	175	
		400	260	2400								200	200	
		450	310	2500								250	225	
		500	340	2450								300	250	
		550	370	2400						150	50	-	275	6
		600	400	2350						175			300	
		650	430	2300						200			325	
		700	460	2200						225			350	
		750	490	2100						250			375	
		800	520	2000						275			400	
		850	550	1900						300			425	
		900	600	1800						325			450	
		950	630	1700						350			475	
		1000	660	1600						375			500	
		1100	720	1400						425			550	
		1200	800	1200						475			600	
		1300	860	1000						525			650	
		1400	920	800						575			700	
		1500	1000	600						625			750	

The load capacity for aluminum is 40 % and for stainless steel 60 % of the stated values, if available in this material variant (see Technical features overview).

Tab. 11

HTC075

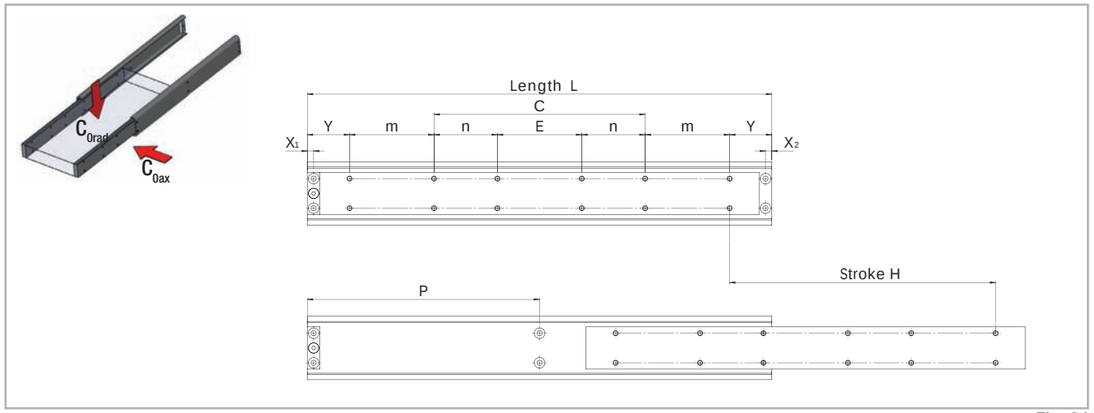

All dimensions are indicated in mm

Fig. 64

Type	Size	Length L [mm]	Stroke H [mm]	Load capacity per pair C_{0rad} [N]	Load capacity per pair C_{0ax} [N]	X1	X2	Y	m	n	E	C	P	Number of holes
HTC	75	400	240	2800	60 % C_{0rad}	7.5	7.5	50	100	-	-	150	200	6
		450	270	2850								175	225	
		500	300	2900								200	250	
		550	330	3000						75	100	-	275	12
		600	360	2950						100			300	
		650	390	2900						125			325	
		700	420	2850						150			350	
		750	450	2800						175			375	
		800	480	2750						200			400	
		850	510	2700						225			425	
		900	540	2650						250			450	
		950	570	2600						275			475	
		1000	600	2500						300			500	
		1100	660	2250						350			550	
		1200	720	2000						400			600	
		1300	780	1750						450			650	
		1400	840	1500						500			700	
		1500	900	1200						550			750	
		1600	960	900						600			800	
		1700	1020	700						650			850	

The load capacity for aluminum is 40 % and for stainless steel 60 % of the stated values, if available in this material variant (see Technical features overview).

Tab. 12

HTC

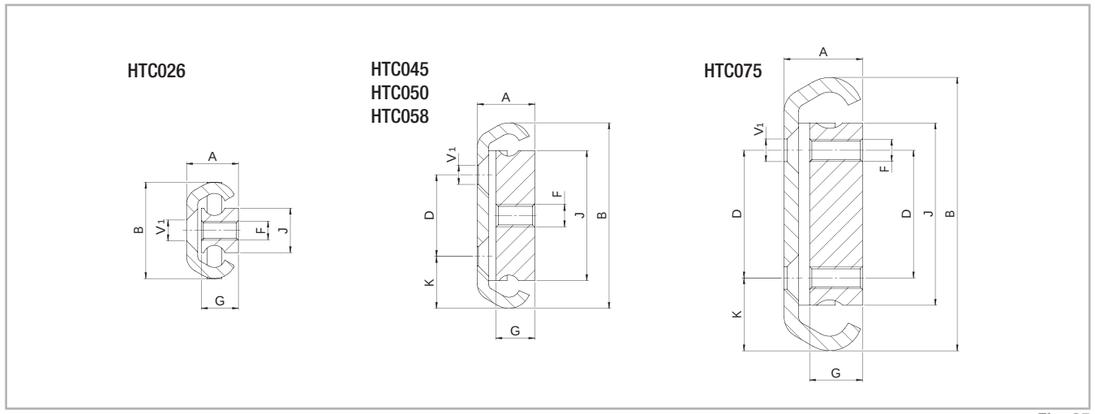

Fig. 65

All dimensions are indicated in mm
V¹ Mounting holes (V) for countersunk screws according to DIN 7991/ISO 10642

Type	Size	A	B	J	G	K	D	F	V1	Weight per single guide [kg/m]
HTC	26	14	26	12	10	-	-	M5	M5	1.81
	45	15.5	45	30	10	11.5	22	M6	M6	3.80
	50		50	35	10.5	14	22		M5	3.80
	58	17.5	58	40	12	13	32	M8	M6	7.10
	75	21.5	75	50	14.5	20	35	M6		8.80

Tab. 13

HVB026

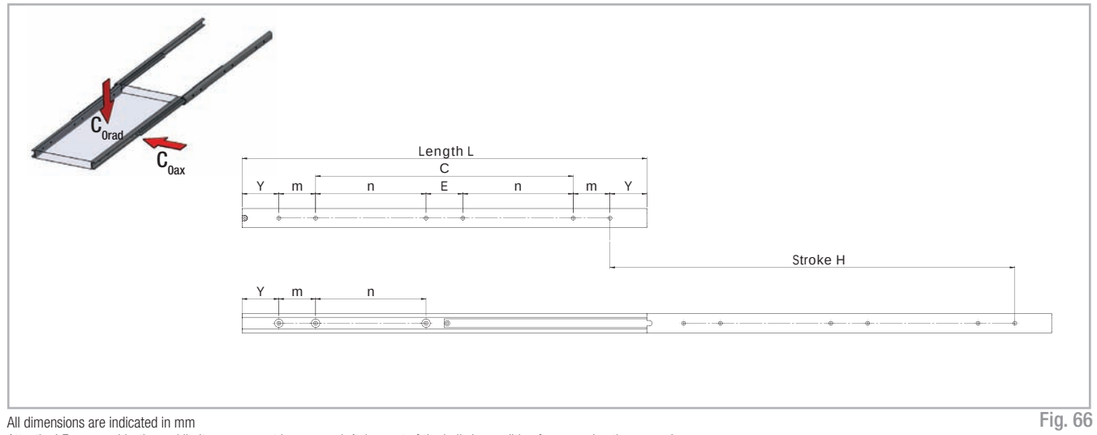

Fig. 66

All dimensions are indicated in mm
Attention! For assembly, the end limit screws must be removed. A drop out of the balls is possible after removing the screws!

Type	Size	Length L [mm]	Stroke H [mm]	Load capacity per pair C_{0rad} [N]	Load capacity per pair C_{0ax} [N]	Y	m	C	Number of holes
HVB	26	250	250	1050	60 % C_{0rad}	50	50	50	4
		300	300	1100				100	
		350	350	1150				150	
		400	400	1100				200	
		450	450	1050				250	
		500	500	1000				300	
		550	550	950				-	6
		600	600	900					
		650	650	850					
		700	700	800					
		750	750	750					
		800	800	700					
		850	850	650					
		900	900	600					
		950	950	550					
		1000	1000	500					

The load capacity for aluminum is 40 % and for stainless steel 60 % of the stated values, if available in this material variant (see Technical features overview).

Tab. 14

HVB

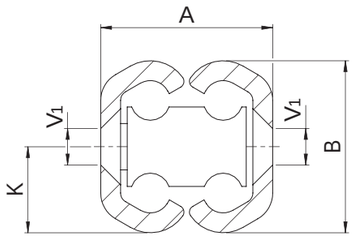

Fig. 67

All dimensions are indicated in mm
V¹ Mounting holes (V) for countersunk screws according to DIN 7991/ISO 10642

Type	Size	A	B	K	V1	Weight per single guide [kg/m]
HVB	26	26	26	13	M5	3.80

Tab. 15

HVD026

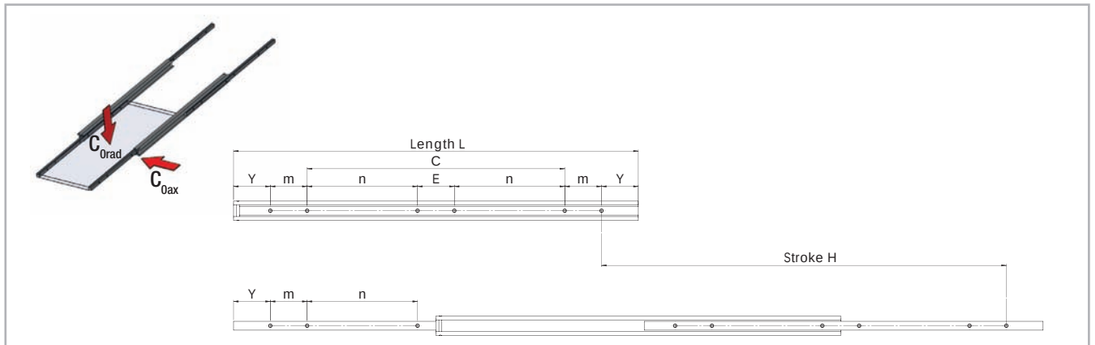

Fig. 68

All dimensions are indicated in mm

Type	Size	Length L [mm]	Stroke H [mm]	Load capacity per pair C_{0rad} [N]	Load capacity per pair C_{0ax} [N]	Y	m	C	Number of holes
HVD	26	250	250	650	50 % C_{0rad}	50	50	50	4
		300	300	700				100	
		350	350	750				150	
		400	400	700				200	
		450	450	650				250	
		500	500	600				300	
		550	550	550				-	6
		600	600	500					
		650	650	450					
		700	700	400					
		750	750	350					
		800	800	300					
		850	850	270					
		900	900	240					
		950	950	220					
		1000	1000	200					

The load capacity for aluminum is 40 % and for stainless steel 60 % of the stated values, if available in this material variant (see Technical features overview).

Tab. 16

HVD045, HVD050, HVD058

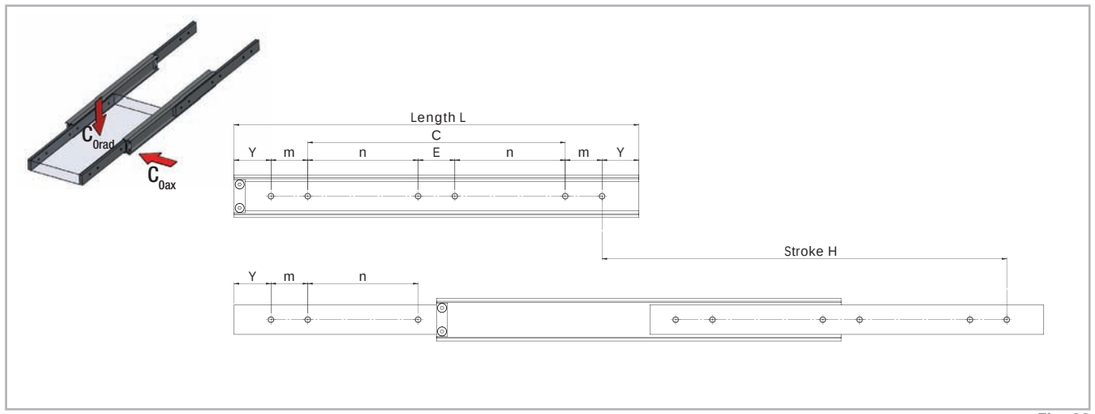

All dimensions are indicated in mm

Fig. 69

Type	Size	Length L [mm]	Stroke H [mm]	Load capacity per pair C_{0rad} [N]	Load capacity per pair C_{0ax} [N]	Y	m	n*	E*	C	Number of holes
HVD	45	300	300	1600	50 % C_{0rad}	50	50	-	-	100	4
		350	350	1650						150	
		400	400	1700						200	
		450	450	1700						250	
		500	500	1700						300	
		550	550	1650				150	50	-	6
		600	600	1600				175			
		650	650	1550				200			
		700	700	1500				225			
		750	750	1450				250			
		800	800	1400				275			
		850	850	1350				300			
		900	900	1300				325			
		950	950	1250				350			
		1000	1000	1200				375			
		1100	1100	1100				400			
		1200	1200	1000				425			

The load capacity for aluminum is 40 % and for stainless steel 60 % of the stated values, if available in this material variant (see Technical features overview).
* When using full telescopes with interlocks in the open state (VO) or with interlocks open and closed (VB) the following measures change: n reduces by 35 mm - E increases to 120 mm.

Tab. 17

Type	Size	Length L [mm]	Stroke H [mm]	Load capacity per pair C_{0rad} [N]	Load capacity per pair C_{0ax} [N]	Y	m	n*	E*	C	Number of holes
HVD	50	300	300	1800	50 % C_{0rad}	50	50	-	-	100	4
		350	350	1850						150	
		400	400	1900						200	
		450	450	1850						250	
		500	500	1800						300	
		550	550	1750				150	50	-	6
		600	600	1700				175			
		650	650	1650				200			
		700	700	1600				225			
		750	750	1550				250			
		800	800	1500				275			
		850	850	1450				300			
		900	900	1400				325			
		950	950	1350				350			
		1000	1000	1300				375			
		1100	1100	1200				425			
		1200	1200	1100				475			
		1300	1300	1000				525			
		1400	1400	900				575			
		1500	1500	800				625			

The load capacity for aluminum is 40 % and for stainless steel 60 % of the stated values, if available in this material variant (see Technical features overview).
* When using full telescopes with interlocks in the open state (VO) or with interlocks open and closed (VB) the following measures change: n reduces by 35 mm - E increases to 120 mm.

Tab. 18

Type	Size	Length L [mm]	Stroke H [mm]	Load capacity per pair C_{0rad} [N]	Load capacity per pair C_{0ax} [N]	Y	m	n*	E*	C	Number of holes
HVD	58	300	300	2400	50 % C_{0rad}	50	50	-	-	100	4
		350	350	2450						150	
		400	400	2500						200	
		450	450	2450						250	
		500	500	2400						300	
		550	550	2350				150	50	-	6
		600	600	2300				175			
		650	650	2250				200			
		700	700	2200				225			
		750	750	2150				250			
		800	800	2100				275			
		850	850	2050				300			
		900	900	2000				325			
		950	950	1900				350			
		1000	1000	1850				375			
		1100	1100	1750				425			
		1200	1200	1650				475			
		1300	1300	1550				525			
		1400	1400	1450				575			
		1500	1500	1400				625			

Tab. 19

The load capacity for aluminum is 40 % and for stainless steel 60 % of the stated values, if available in this material variant (see Technical features overview).
* When using full telescopes with interlocks in the open state (VO) or with interlocks open and closed (VB) the following measures change: n reduces by 35 mm - E increases to 120 mm.

HVD075

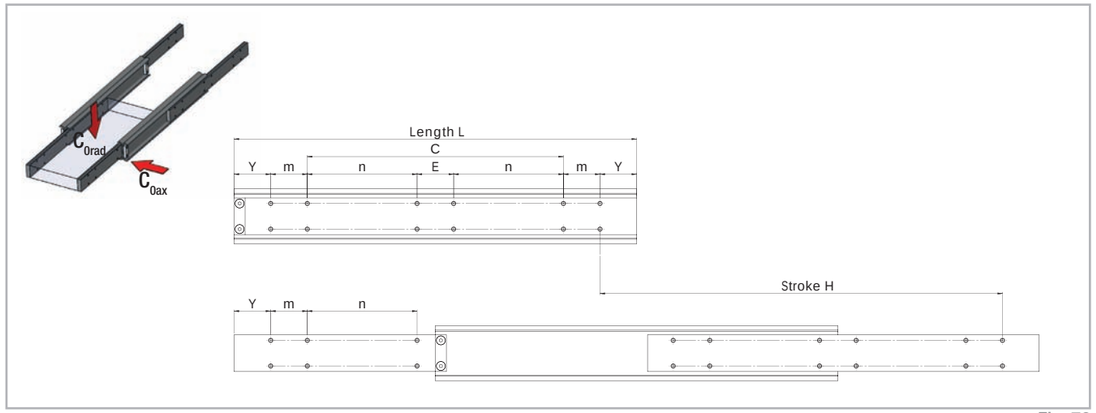

All dimensions are indicated in mm

Fig. 70

Type	Size	Length L [mm]	Stroke H [mm]	Load capacity per pair C_{0rad} [N]	Load capacity per pair C_{0ax} [N]	Y	m	n*	E*	C	Number of holes
HVD	75	300	300	3600	50 % C_{0rad}	50	50	-	-	100	8
		350	350	3650						150	
		400	400	3700						200	
		450	450	3650						250	
		500	500	3600						300	
		550	550	3550				150	50	-	12
		600	600	3500				175			
		650	650	3450				200			
		700	700	3400				225			
		750	750	3350				250			
		800	800	3300				275			
		850	850	3250				300			
		900	900	3200				325			
		950	950	3150				350			
		1000	1000	3100				375			
		1100	1100	3000				425			
		1200	1200	2900				475			
		1300	1300	2750				525			
		1400	1400	2600				575			
		1500	1500	2450				625			
		1600	1600	2300				675			
		1700	1700	2100				725			
		1800	1800	1900				775			
		1900	1900	1700				825			
		2000	2000	1400				875			

Tab. 20

The load capacity for aluminum is 40 % and for stainless steel 60 % of the stated values, if available in this material variant (see Technical features overview).
* When using full telescopes with interlocks in the open state (VO) or with interlocks open and closed (VB) the following measures change: n reduces by 35 mm - E increases to 120 mm.

HVD

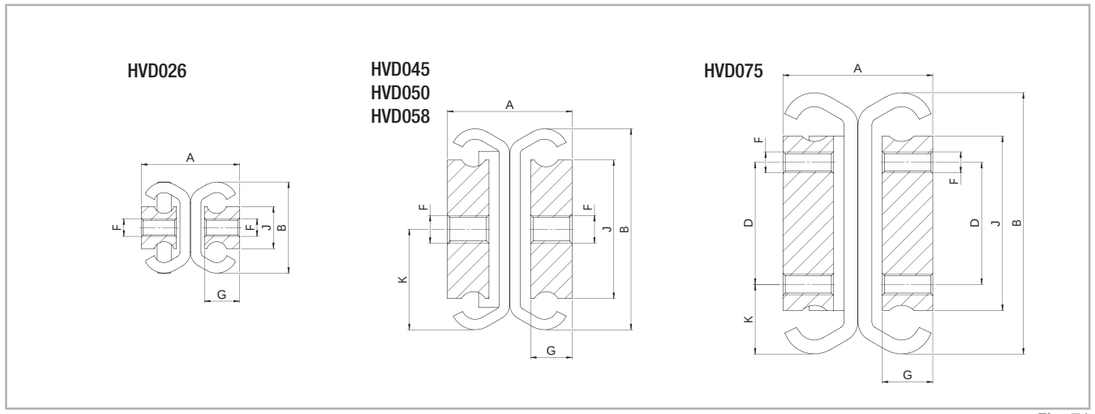

All dimensions are indicated in mm

Fig. 71

Type	Size	A	B	J	G	K	D	F	Weight per single guide [kg/m]
HVD	26	28	26	12	10	-	-	M5	3.80
	45	31	45	30		22.5		M6	7.70
	50		50	35		25			8.80
	58	35	58	40	12	29		M8	11.70
	75	43	75	50	14.5	20	35		18.80

Tab. 21

HVC045, HVC050, HVC058, HVC075

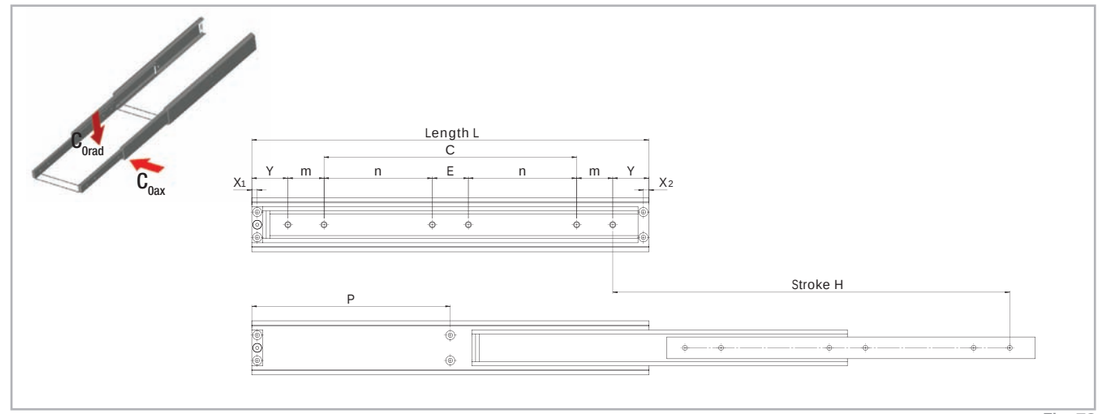

All dimensions are indicated in mm

Fig. 72

Type	Size	Length L [mm]	Stroke H [mm]	Load capacity per pair C_{0rad} [N]	Load capacity per pair C_{0ax} [N]	X1	X2	Y	m	C	P	Number of holes
HVC	45	300	300	1150	50 % C_{0rad}	7.5	7.5	50	50	100	-	4
		350	350	1200						150		
		400	400	1200						200		
		450	450	1150						250		
		500	500	1150						300		
		550	550	1100						-	275	6
		600	600	1050							300	
		650	650	1000							325	
		700	700	950							350	
		750	750	900							325	
		800	800	850							400	
		850	850	800							425	
		900	900	750							450	
		950	950	700							475	
		1000	1000	650							500	
		1100	1100	500							50	
		1200	1200	400							600	

The load capacity for aluminum is 40% and for stainless steel 60% of the stated values, if available in this material variant (see Technical features overview).

Tab. 22

Type	Size	Length L [mm]	Stroke H [mm]	Load capacity per pair C_{0rad} [N]	Load capacity per pair C_{0ax} [N]	X1	X2	Y	m	n*	E*	C	P	Number of holes
HVC	50	300	300	1400	50 % C_{0rad}	7.5	7.5	50	50	-	-	100	-	4
		350	350	1450								150		
		400	400	1500								200		
		450	450	1450								250		
		500	500	1400								300		
		550	550	1350						150	50	-	275	6
		600	600	1300						175			300	
		650	650	1250						200			325	
		700	700	1200						225			350	
		750	750	1150						250			325	
		800	800	1100						275			400	
		850	850	1050						300			425	
		900	900	1000						325			450	
		950	950	950						350			475	
		1000	1000	900						375			500	
		1100	1100	800						425			550	
		1200	1200	700						475			600	
		1300	1300	600						525			650	
		1400	1400	500						575			700	
		1500	1500	400						625			750	

Tab. 23

The load capacity for aluminum is 40 % and for stainless steel 60 % of the stated values, if available in this material variant (see Technical features overview).

* When using full telescopes with interlocks in the open state (VO) or with interlocks open and closed (VB) the following measures change: n reduces by 35 mm - E increases to 120 mm.

Type	Size	Length L [mm]	Stroke H [mm]	Load capacity per pair C_{0rad} [N]	Load capacity per pair C_{0ax} [N]	X1	X2	Y	m	n*	E*	C	P	Number of holes
HVC	58	300	300	2000	50 % C_{0rad}	7.5	7.5	50	50	-	-	100	-	4
		350	350	2050								150		
		400	400	2100								200		
		450	450	2050								250		
		500	500	2000								300		
		550	550	1950						150	50	-	275	6
		600	600	1900						175			300	
		650	650	1850						200			325	
		700	700	1800						225			350	
		750	750	1750						250			325	
		800	800	1700						275			400	
		850	850	1650						300			425	
		900	900	1600						325			450	
		950	950	1500						350			475	
		1000	1000	1450						375			500	
		1100	1100	1350						425			550	
		1200	1200	1250						475			600	
		1300	1300	1150						525			650	
		1400	1400	1050						575			700	
		1500	1500	1000						625			750	

Tab. 24

The load capacity for aluminum is 40 % and for stainless steel 60 % of the stated values, if available in this material variant (see Technical features overview).

* When using full telescopes with interlocks in the open state (VO) or with interlocks open and closed (VB) the following measures change: n reduces by 35 mm - E increases to 120 mm.

Type	Size	Length L [mm]	Stroke H [mm]	Load capacity per pair C_{0rad} [N]	Load capacity per pair C_{0ax} [N]	X1	X2	Y	m	n*	E*	C	P	Number of holes
HVC	75	300	300	3200	50 % C_{0rad}	7.5	7.5	50	50	-	-	100	-	4
		350	350	3250								150		
		400	400	3300								200		
		450	450	3250								250		
		500	500	3200								300		
		550	550	3150						150	50	-	275	6
		600	600	3100						175			300	
		650	650	3050						200			325	
		700	700	3000						225			350	
		750	750	2950						250			325	
		800	800	2900						275			400	
		850	850	2850						300			425	
		900	900	2800						325			450	
		950	950	2750						350			475	
		1000	1000	2700						375			500	
		1100	1100	2600						425			550	
		1200	1200	2500						475			600	
		1300	1300	2350						525			650	
		1400	1400	2200						575			700	
		1500	1500	2050						625			750	
		1600	1600	1900						675			800	
		1700	1700	1750						725			50	
		1800	1800	1600						775			900	
		1900	1900	1450						825			950	
		2000	2000	1300						875			1000	

Tab. 25

The load capacity for aluminum is 40 % and for stainless steel 60 % of the stated values, if available in this material variant (see Technical features overview).

*When using full telescopes with interlocks in the open state (VO) or with interlocks open and closed (VB) the following measures change: n reduces by 35 mm - E increases to 120 mm.

HVC

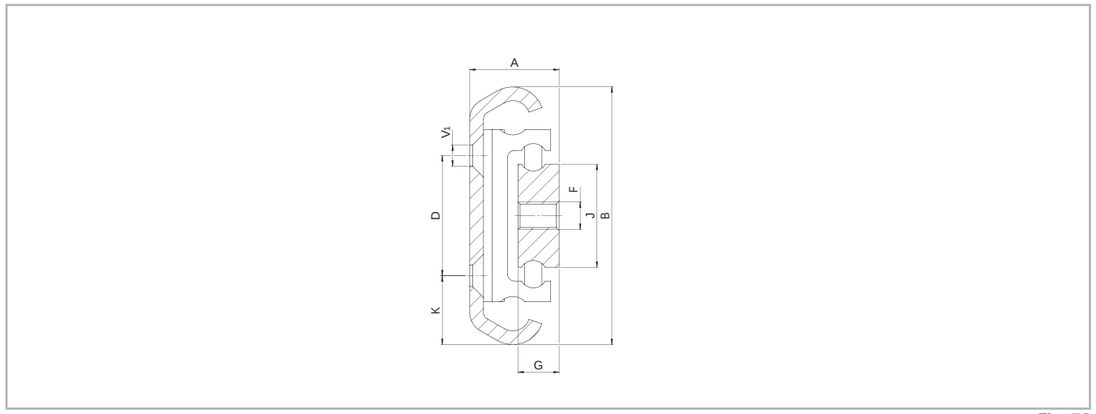

Fig. 73

All dimensions are indicated in mm

V1 Mounting holes (V) for countersunk screws according to DIN 7991/ISO 10642

Type	Size	A	B	J	G	K	D	F	V1	Weight per single guide [kg/m]
HVC	45	20.5	45	16	10	11.5	22	M6	M5	4.00
	50	22.1	50	20	12	14				5.10
	58	24	58	25		13	32	M8	M6	6.50
	75	26	75	30		20	35			9.30

Tab. 26

HVT060, HVT080

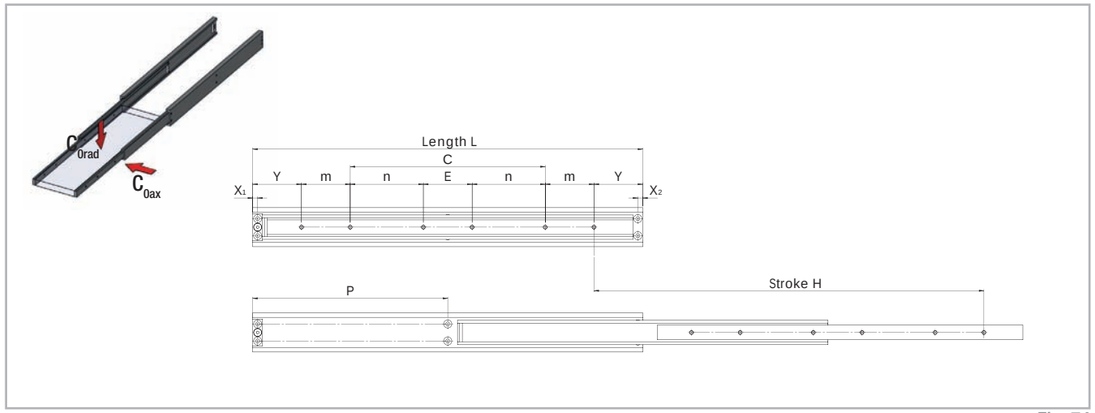

All dimensions are indicated in mm

Fig. 74

Type	Size	Length L [mm]	Stroke H [mm]	Load capacity per pair C_{0rad} [N]	Load capacity per pair C_{0ax} [N]	X1	X2	Y	m	n*	E*	C	P	Number of holes
HVT	60	300	300	2600	50 % C_{0rad}	7.5	7.5	50	50	-	-	100	-	4
		350	350	2650								150		
		400	400	2700								200		
		450	450	2650								250		
		500	500	2600								300		
		550	550	2550						150	50	-	275	6
		600	600	2500						175			300	
		650	650	2450						200			325	
		700	700	2400						225			350	
		750	750	2350						250			325	
		800	800	2300						275			400	
		850	850	2250						300			425	
		900	900	2200						325			450	
		950	950	2130						350			475	
		1000	1000	2050						375			500	
		1100	1100	1900						425			550	
		1200	1200	1750						475			600	
		1300	1300	1600						525			650	
		1400	1400	1500						575			700	
		1500	1500	1400						625			750	

Tab. 27

The load capacity for aluminum is 40% and for stainless steel 60% of the stated values, if available in this material variant (see Technical features overview).
*When using full telescopes with interlocks in the open state (VO) or with interlocks open and closed (VB) the following measures change: n reduces by 35 mm - E increases to 120 mm.

Type	Size	Length L [mm]	Stroke H [mm]	Load capacity per pair C_{0rad} [N]	Load capacity per pair C_{0ax} [N]	X1	X2	Y	m	n*	E*	C	P	Number of holes
HVT	80	500	500	4250	50 % C_{0rad}	10	10	100	100	-	-	100	-	4
		550	550	4300								150		
		600	600	4350								200		
		650	650	4350								250		
		700	700	4350								300		
		750	750	4300								350		
		800	800	4250						150	100	-	400	6
		850	850	4200						175			425	
		900	900	4100						200			450	
		950	950	4000						225			475	
		1000	1000	3900						250			500	
		1100	1100	3700						300			550	
		1200	1200	3500						350			600	
		1300	1300	3250						400			650	
		1400	1400	3000						450			700	
		1500	1500	2700						500			750	
		1600	1600	2400						550			800	
		1700	1700	2150						600			850	
		1800	1800	1900						650			900	
		1900	1900	1650						700			950	
		2000	2000	1400						750			1000	

Tab. 28

The load capacity for aluminum is 40 % and for stainless steel 60 % of the stated values, if available in this material variant (see Technical features overview).
*When using full telescopes with interlocks in the open state (VO) or with interlocks open and closed (VB) the following measures change: n reduces by 10 mm - E increases to 120 mm.

HVT100

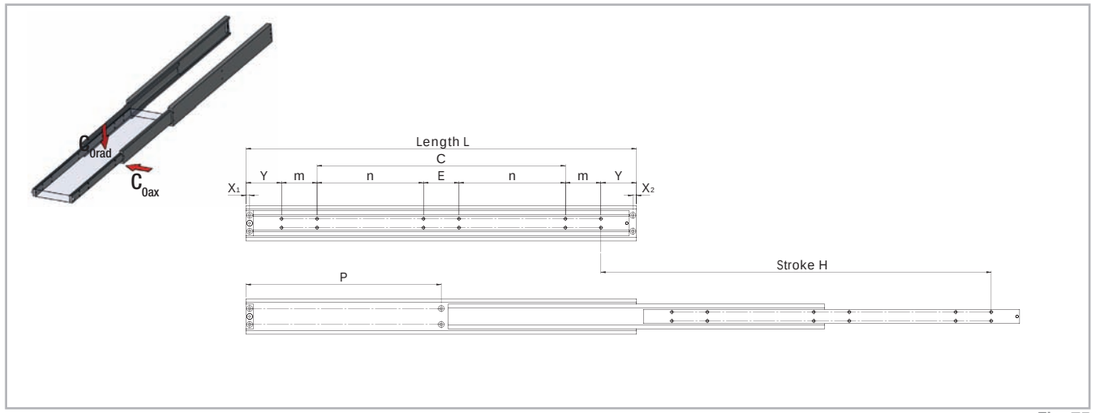

All dimensions are indicated in mm

Fig. 75

Type	Size	Length L [mm]	Stroke H [mm]	Load capacity per pair C_{0rad} [N]	Load capacity per pair C_{0ax} [N]	X1	X2	Y	m	n*	E*	C	P	Number of holes
HVT	100	600	600	5700	50 % C_{0rad}	10	10	100	100	-	-	200	-	8
		650	650	5600								250		
		700	700	5500								300		
		750	750	5400								350		
		800	800	5300								400		
		850	850	5200								450		
		900	900	5100								500		
		950	950	5000								550		
		1000	1000	4900								600		
		1100	1100	4700						300	100	-	550	12
		1200	1200	4500						350			600	
		1300	1300	4250						400			650	
		1400	1400	4000						450			700	
		1500	1500	3750						500			750	
		1600	1600	3500						550			800	
		1700	1700	3250						600			850	
		1800	1800	3000						650			900	
		1900	1900	2700						700			950	
		2000	2000	2400						750			1000	

Tab. 29

The load capacity for aluminum is 40 % and for stainless steel 60 % of the stated values, if available in this material variant (see Technical features overview).
*When using full telescopes with interlocks in the open state (VO) or with interlocks open and closed (VB) the following measures change: n reduces by 10 mm - E increases to 120 mm.

HVT

HVT060
HVT080

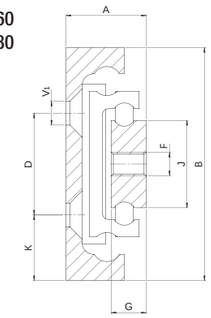

HVT100

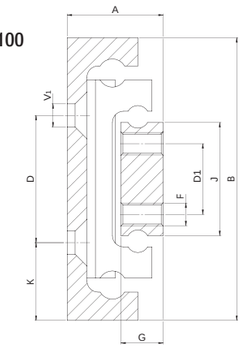

All dimensions are indicated in mm
V1 Mounting holes (V) for countersunk screws according to DIN 7991/ISO 10642

Fig. 76

Type	Size	A	B	J	G	K	D	D1	F	V1	Weight per single guide [kg/m]
HVT	60	26	60	25	12	14	32	-	M8	M6	5.10
	80	27.5	80	30		12.5	35			M8	11.40
	100	34	100	40	15	27.5	45	25			18.70

Tab. 30

H1D045, H1D050, H1D058

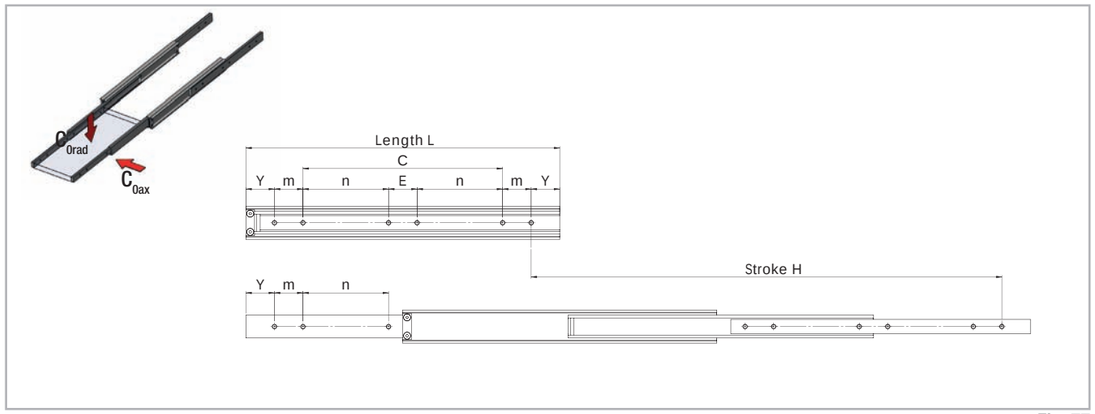

All dimensions are indicated in mm

Fig. 77

Type	Size	Length L [mm]	Stroke H [mm]	Load capacity per pair C_{0rad} [N]	Y	m	n	E	C	Number of holes
H1D	45	250	375	500	50	50	-	-	50	4
		300	450	550					100	
		350	525	600					150	
		400	600	650					200	
		450	675	650					250	
		500	750	650					300	
		550	825	650			150	50	-	6
		600	900	600			175			
		650	975	600			200			
		700	1050	550			225			
		750	1125	500			250			
		800	1200	450			275			
		850	1275	400			300			
		900	1350	350			325			
		950	1425	300			350			
		1000	1500	250			375			

The load capacity for aluminum is 40 % and for stainless steel 60 % of the stated values, if available in this material variant (see Technical features overview).

Tab. 31

Type	Size	Length L [mm]	Stroke H [mm]	Load capacity per pair C_{0rad} [N]	Y	m	n	E	C	Number of holes
H1D	50	250	375	600	50	50	-	-	50	4
		300	450	650					100	
		350	525	700					150	
		400	600	750					200	
		450	675	800					250	
		500	750	750					300	
		550	825	720			150	50	-	6
		600	900	690			175			
		650	975	650			200			
		700	1050	610			225			
		750	1125	570			250			
		800	1200	540			275			
		850	1275	500			300			
		900	1350	450			325			
		950	1425	400			350			
		1000	1500	350			375			
H1D	58	300	450	1700	50	50	-	-	100	4
		350	525	1800					150	
		400	600	1850					200	
		450	675	1900					250	
		500	750	1900					300	
		550	825	1850			150	50	-	6
		600	900	1800			175			
		650	975	1750			200			
		700	1050	1700			225			
		750	1125	1650			250			
		800	1200	1600			275			
		850	1275	1530			300			
		900	1350	1460			325			
		950	1425	1390			350			
		1000	1500	1320			375			
		1100	1650	1190			425			
		1200	1800	1060			475			
		1300	1950	920			525			
		1400	2100	760			575			
		1500	2250	600			625			

The load capacity for aluminum is 40 % and for stainless steel 60 % of the stated values, if available in this material variant (see Technical features overview).

Tab. 32

H1D075

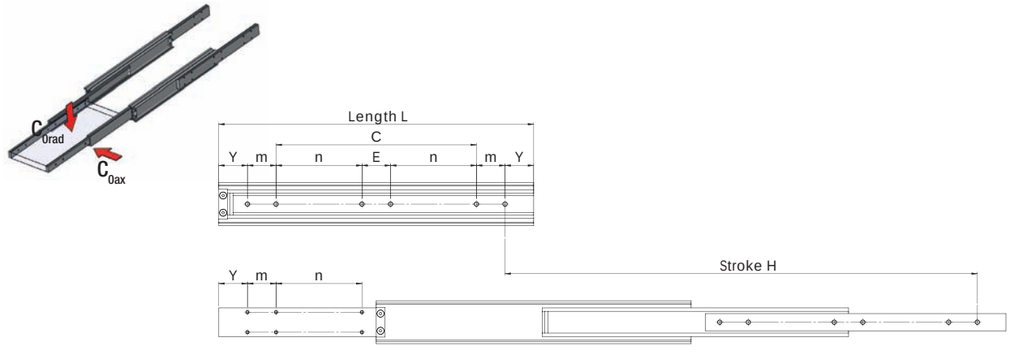

All dimensions are indicated in mm

Fig. 78

Type	Size	Length L [mm]	Stroke H [mm]	Load capacity per pair C_{0rad} [N]	Y	m	n	E	C	Number of holes M6	Number of holes M8
H1D	75	300	450	2400	50	50	-	-	100	8	4
		350	525	2500					150		
		400	600	2550					200		
		450	675	2600					250		
		500	750	2600					300		
		550	825	2550			150	50	-	12	6
		600	900	2500			175				
		650	975	2450			200				
		700	1050	2400			225				
		750	1125	2350			250				
		800	1200	2300			275				
		850	1275	2250			300				
		900	1350	2200			325				
		950	1425	2150			350				
		1000	1500	2100			375				
		1100	1650	2000			425				
		1200	1800	1850			475				
		1300	1950	1700			525				
		1400	2100	1550			575				
		1500	2250	1400			625				

The load capacity for aluminum is 40 % and for stainless steel 60 % of the stated values, if available in this material variant (see Technical features overview).

Tab. 33

H1D

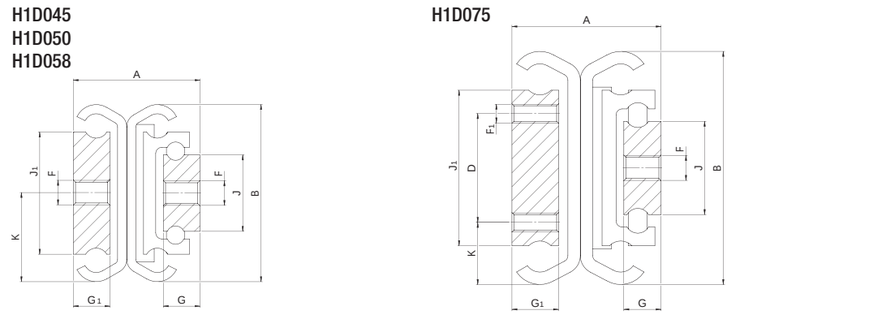

All dimensions are indicated in mm

Fig. 79

Type	Size	A	B	J	J1	G	G1	K	D	F	F1	Weight per single guide [kg/m]
H1D	45	36	45	16	30	10	10	22.5	-	M6	-	7.80
	50	37.5	50	20	35	12	10	25				9.60
	58	41.5	58	25	40	12	12	29		M8		8.80
	75	48	75	30	50		15	20	35		M6	18.35

Tab. 34

H1C075

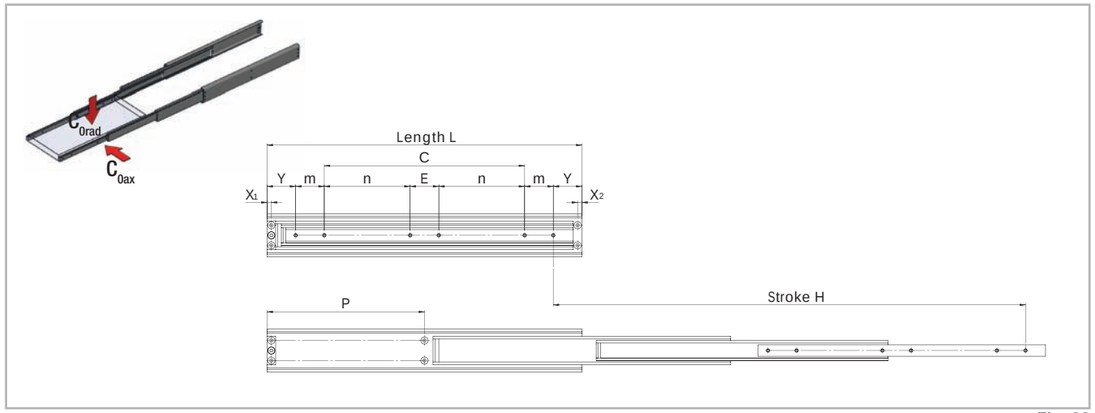

All dimensions are indicated in mm

Fig. 80

Type	Size	Length L [mm]	Stroke H [mm]	Load capacity per pair C_{0rad} [N]	X1	X2	Y	m	n	E	C	P	Number of holes
H1C	75	300	450	1200	7.5	7.5	50	50	-	50	100	-	4
		350	525	1250							150		
		400	600	1300							200		
		450	675	1350							250		
		500	750	1300							300		
		550	825	1200					150		-	275	6
		600	900	1150					175			300	
		650	975	1100					200			325	
		700	1050	1050					225			350	
		750	1125	1000					250			325	
		800	1200	950					275			400	
		850	1275	900					300			425	
		900	1350	850					325			450	
		950	1425	800					350			475	
		1000	1500	750					375			500	
		1100	1650	650					425			550	
		1200	1800	550					475			600	
		1300	1950	450					525			650	
		1400	2100	350					575			700	
		1500	2250	200					325			750	

The load capacity for aluminum is 40 % and for stainless steel 60 % of the stated values, if available in this material variant (see Technical features overview).

Tab. 35

H1C075

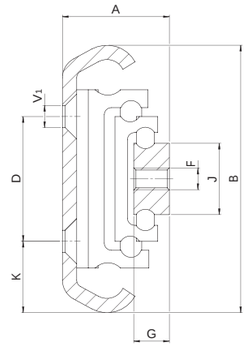

All dimensions are indicated in mm
V1 Mounting holes (V) for countersunk screws according to DIN 7991/ISO 10642

Fig. 81

Type	Size	A	B	J	G	K	D	F	V1	Weight per single guide [kg/m]
H1C	75	30	75	20	10	20	35	M6	M6	8.60

Tab. 36

H1T060, H1T080

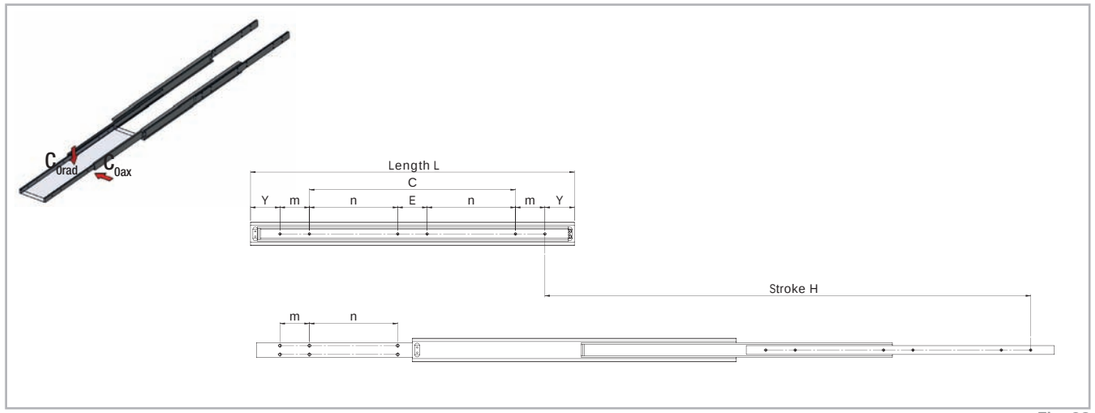

All dimensions are indicated in mm

Fig. 82

Type	Size	Length L [mm]	Stroke H [mm]	Load capacity per pair C_{0rad} [N]	Y	m	n	E	C	Number of holes M6	Number of holes M8
H1T	60	300	450	2400	50	50	-	-	100	8	4
		350	525	2500					150		
		400	600	2550					200		
		450	675	2600					250		
		500	750	2600					300		
		550	825	2550			150	50	-	12	6
		600	900	2500			175				
		650	975	2450			200				
		700	1050	2400			225				
		750	1125	2350			250				
		800	1200	2300			275				
		850	1275	2250			300				
		900	1350	2200			325				
		950	1425	2150			350				
		1000	1500	2100			375				
		1100	1650	2000			425				
		1200	1800	1850			475				
		1300	1950	1700			525				
		1400	2100	1550			575				
		1500	2250	1400			625				

The load capacity for aluminum is 40 % and for stainless steel 60 % of the stated values, if available in this material variant (see Technical features overview).

Tab. 37

Type	Size	Length L [mm]	Stroke H [mm]	Load capacity per pair C_{0rad} [N]	Y	m	n	E	C	Number of holes M8	Number of holes M10
H1T	80	500	750	3100	100	100	-	-	100	4	8
		550	825	3150					150		
		600	900	3200					200		
		650	975	3150					250		
		700	1050	3100					300		
		750	1125	3000					350		
		800	1200	2900					400		
		850	1275	2800					450		
		900	1350	2700					500		
		950	1425	2600					550		
		1000	1500	2500					600		
		1100	1650	2280			300	100	-	6	12
		1200	1800	2060			350				
		1300	1950	1840			400				
		1400	2100	1620			450				
		1500	2250	1400			500				

The load capacity for aluminum is 40 % and for stainless steel 60 % of the stated values, if available in this material variant (see Technical features overview).

Tab. 38

H1T100, H1T150

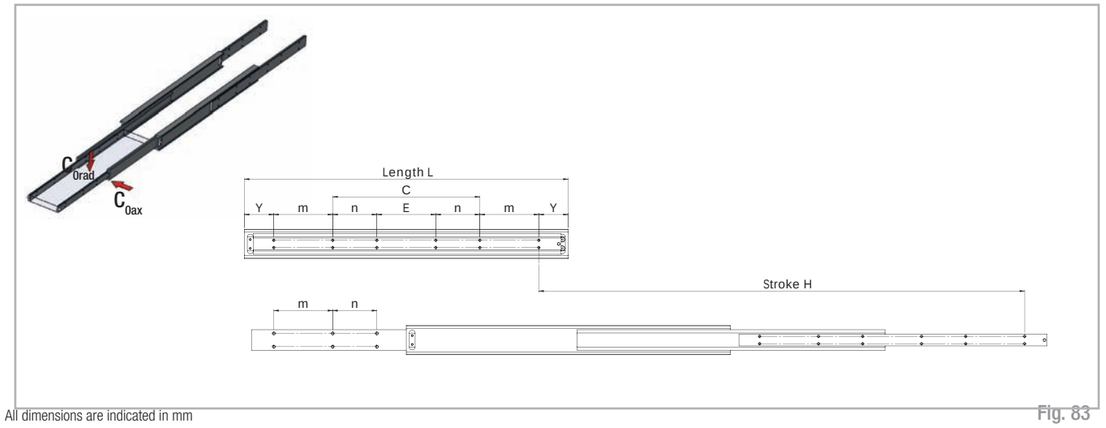

All dimensions are indicated in mm

Fig. 83

Type	Size	Length L [mm]	Stroke H [mm]	Load capacity per pair C_{0rad} [N]	Y	m	n	E	C	Number of holes
H1T	100	700	1050	5500	100	200	-	-	100	8
		750	1125	5500					150	
		800	1200	5300					200	
		850	1275	5100					250	
		900	1350	4700					300	
		950	1425	4500					350	
		1000	1500	4300					400	
		1100	1650	4000			150	200	-	12
		1200	1800	3700			200			
		1300	1950	3400			250			
		1400	2100	3100			300			
		1500	2250	2900			350			
		1600	2400	2600			400			
		1700	2550	2300			450			
		1800	2700	2000			500			
		1900	2850	1700			550			
		2000	3000	1400			600			

The load capacity for aluminum is 40 % and for stainless steel 60 % of the stated values, if available in this material variant (see Technical features overview).

Tab. 39

Other sizes and versions are available on request

Type	Size	Length L [mm]	Load capacity per pair C_{0rad} [N]
H1T	150	700	7000
		⋮	⋮
		2000	2300

The load capacity for aluminum is 40 % and for stainless steel 60 % of the stated values, if available in this material variant (see Technical features overview).

Tab. 40

H1T

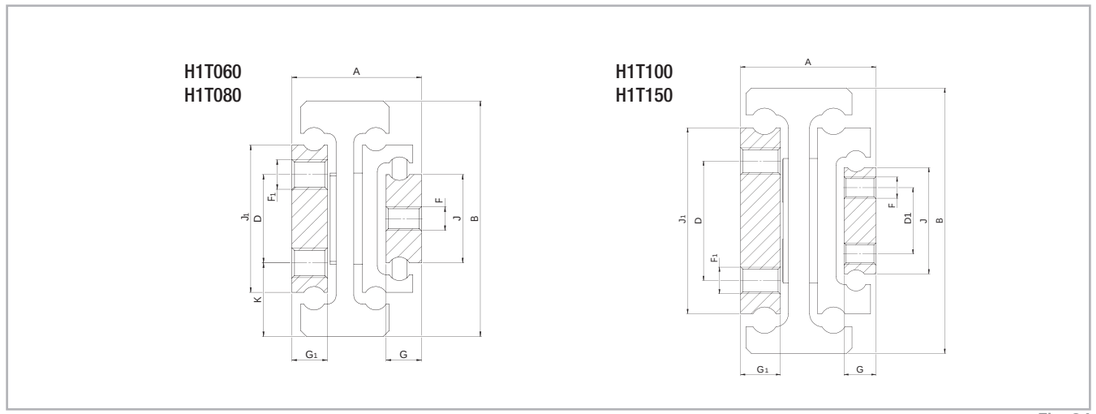

All dimensions are indicated in mm

Fig. 84

Type	Size	A	B	J	J1	G	G1	K	D	D1	F	F1	Weight per single guide [kg/m]
H1T	60	40.5	60	25	40	12	10	19	22	-	M8	M6	12.90
	80	44	80	30	50		12	25	30			M10	18.60
	100	51	100	40	70		15	27.5	45	25			28.60

Tab. 41

H2H080

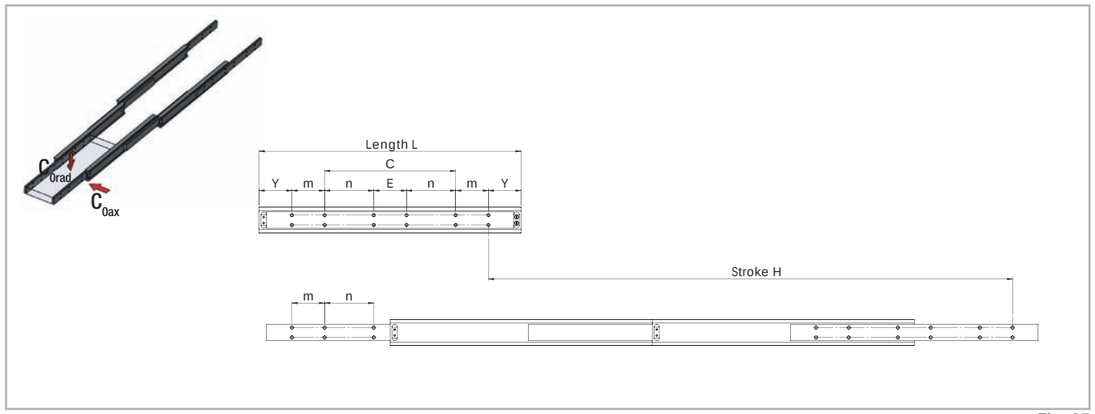

All dimensions are indicated in mm

Fig. 85

Type	Size	Length L [mm]	Stroke H [mm]	Load capacity per pair C_{0rad} [N]	Y	m	n	E	C	Number of holes
H2H	80	500	1000	4850	100	100	-	-	100	8
		550	1100	5200					150	
		600	1200	5400					200	
		650	1300	5500					250	
		700	1400	5350					300	
		750	1500	5200					350	
		800	1600	5050			150	100	-	12
		850	1700	4850			175			
		900	1800	4650			200			
		950	1900	4450			225			
		1000	2000	4250			250			
		1100	2200	3750			300			
		1200	2400	3250			350			
		1300	2600	3100			400			
		1400	2800	3000			450			
		1500	3000	2800			500			

The load capacity for aluminum is 40 % and for stainless steel 60 % of the stated values, if available in this material variant (see Technical features overview).

Tab. 42

H2H080

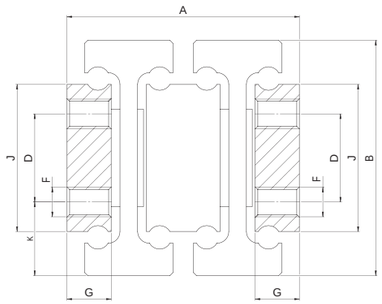

All dimensions are indicated in mm

Fig. 86

Type	Size	A	B	J	G	K	D	F	Weight per single guide [kg/m]
H2H	80	79+-1	80	50	15	25	30	M10	34.80

Tab. 43

LTH30 RF

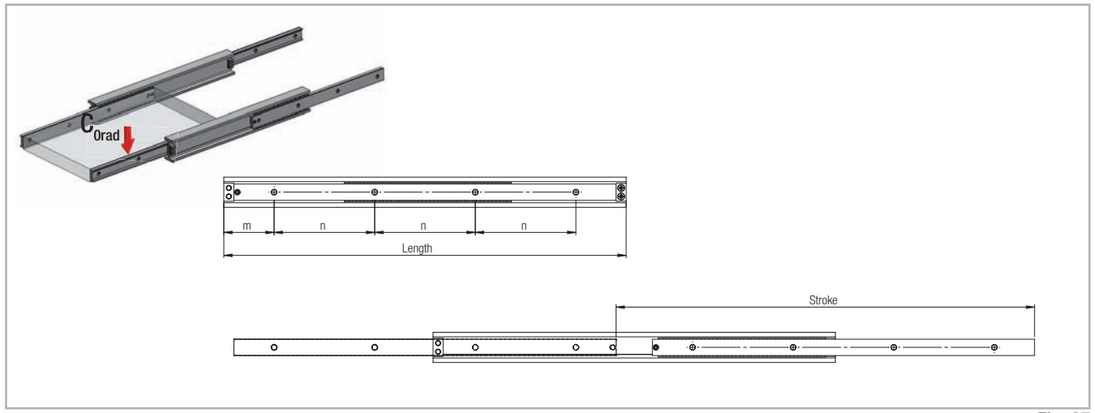

Fig. 87

Type	Size	Length L [mm]	Stroke H [mm]	Load capacity per pair C_{0rad} [N]	Load capacity per pair C_{0ax} [N]	m [mm]	n [mm]	Number of holes
LTH	30	250	285	404	on request	25	100	3
		300	323	1008		50		
		350	377	1042		25		4
		400	416	1136		50		
		450	485	1164		25		5
		500	523	1470		50		
		550	577	1464		25		6
		600	615	1402		50		
		650	685	1230		25		7
		700	723	1186		50		
		750	777	1100		25		8
		800	815	1066		50		
		850	884	962		25		9
		900	923	936		50		
		950	977	882		25		10
		1000	1015	858		50		
		1050	1084	792		25		11
		1100	1123	772		50		
		1150	1176	736		25		12
		1200	1215	720		50		

Tab. 44

LTH30 KF

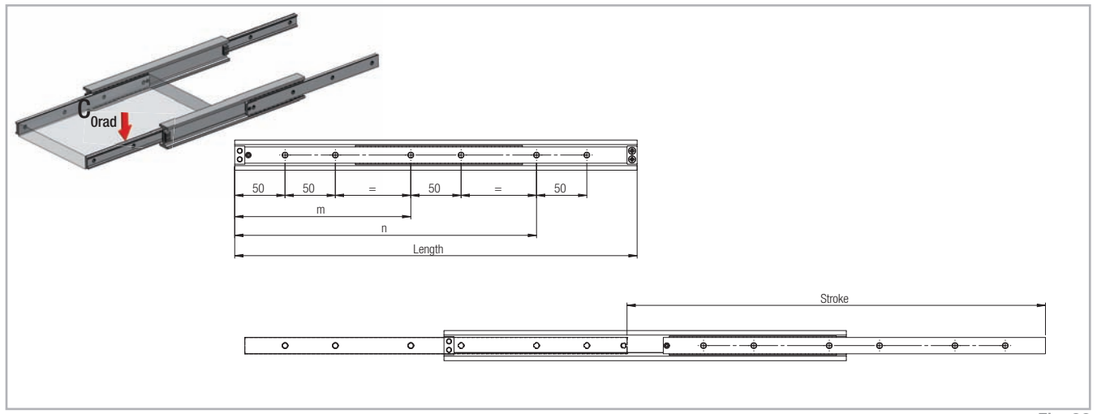

Fig. 88

Type	Size	Length L [mm]	Stroke H [mm]	Load capacity per pair C_{0rad} [N]	Load capacity per pair C_{0ax} [N]	m [mm]	n [mm]	Number of holes
LTH	30	250	285	404	on request	-	150	4
		300	323	1008			200	
		350	377	1042			250	6
		400	416	1136		175	300	
		450	485	1164		200	350	
		500	523	1470		225	400	
		550	577	1464		250	450	
		600	615	1402		275	500	
		650	685	1230		300	550	
		700	723	1186		325	600	
		750	777	1100		350	650	
		800	815	1066		375	700	
		850	884	962		400	750	
		900	923	936		425	800	
		950	977	882		450	850	
		1000	1015	858		475	900	
		1050	1084	792		500	950	
		1100	1123	772		525	1000	
		1150	1176	736		550	1050	
		1200	1215	720		575	1100	

Tab. 45

LTH30 S

… S version with reinforced and dampened end stops made of stainless steel

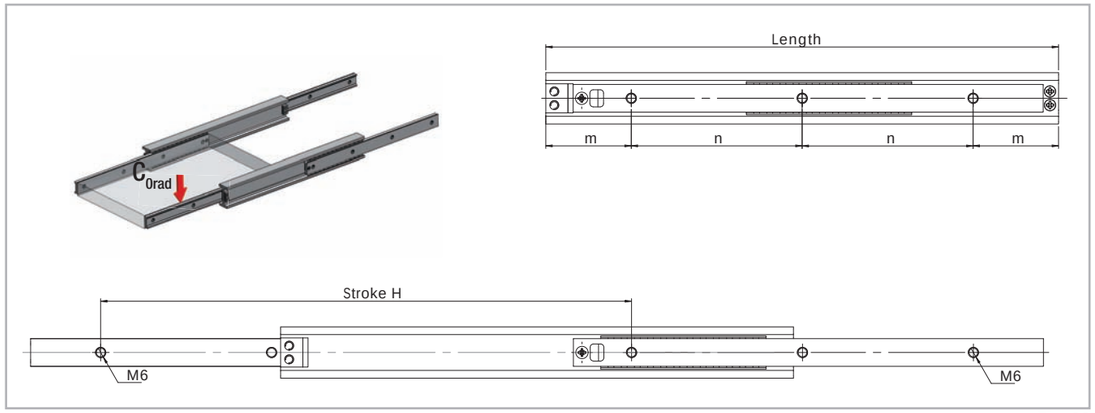

Fig. 89

Type	Size	Length L [mm]	Stroke H [mm]	Load capacity per pair C_{0rad} [N]	Load capacity per pair C_{0ax} [N]	m [mm]	n [mm]	Number of holes
LTH...S	30	300	310	816	on request	50	100	3
		350	364	880		75		
		400	402	994		50		4
		450	472	1032		75		
		500	510	1330		50		5
		550	564	1498		75		
		600	618	1392		50		6
		650	671	1276		75		
		700	725	1178		50		7
		750	764	1138		75		
		800	817	1060		50		8
		850	871	992		75		
		900	925	932		50		9
		950	979	878		75		
		1000	1017	856		50		10
		1050	1071	810		75		
		1100	1109	790		50		11
		1150	1179	732		75		
		1200	1217	718		50		12

Tab. 46

LTH45 RF

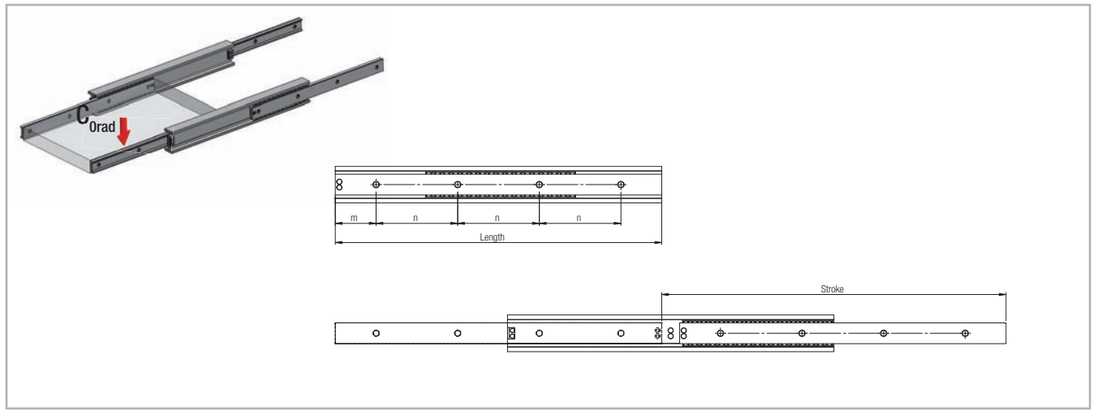

Fig. 90

Type	Size	Length L [mm]	Stroke H [mm]	Load capacity per pair C_{0rad} [N]	Load capacity per pair C_{0ax} [N]	m [mm]	n [mm]	Number of holes
LTH	45	250	276	2610	on request	25	100	3
		300	310	2824		50		
		350	388	2820		25		4
		400	422	2842		50		
		450	478	2864		25		5
		500	512	2900		50		
		550	590	2764		25		6
		600	624	3032		50		
		650	680	3252		25		7
		700	714	3346		50		
		750	770	3084		25		8
		800	826	2860		50		
		850	882	2666		25		9
		900	916	2614		50		
		950	972	2450		25		10
		1000	1028	2306		50		
		1050	1084	2178		25		11
		1100	1118	2144		50		
		1150	1174	2034		25		12
		1200	1230	1934		50		
		1250	1286	1842		25		13
		1300	1320	1818		50		
		1350	1376	1738		25		14
		1400	1410	1716		50		
		1450	1488	1596		25		15
		1500	1522	1578		50		

Tab. 47

LTH45 KF

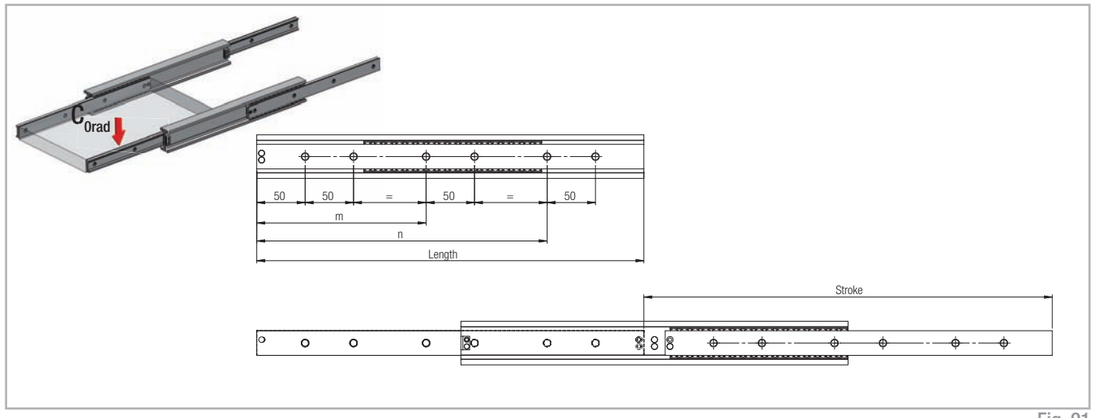

Fig. 91

Type	Size	Length L [mm]	Stroke H [mm]	Load capacity per pair C_{0rad} [N]	Load capacity per pair C_{0ax} [N]	m [mm]	n [mm]	Number of holes
LTH	45	250	276	2610	on request	-	150	4
		300	310	2824			200	
		350	388	2820			250	
		400	422	2842		175	300	6
		450	478	2864		200	350	
		500	512	2900		225	400	
		550	590	2764		250	450	
		600	624	3032		275	500	
		650	680	3252		300	550	
		700	714	3346		325	600	
		750	770	3084		350	650	
		800	826	2860		375	700	
		850	882	2666		400	750	
		900	916	2614		425	800	
		950	972	2450		450	850	
		1000	1028	2306		475	900	
		1050	1084	2178		500	950	
		1100	1118	2144		525	1000	
		1150	1174	2034		550	1050	
		1200	1230	1934		575	1100	
		1250	1286	1842		600	1150	
		1300	1320	1818		625	1200	
		1350	1376	1738		650	1250	
		1400	1410	1716		675	1300	
		1450	1488	1596		700	1350	
		1500	1522	1578		725	1400	

Tab. 48

LTH45 S

… S version with reinforced and dampened end stops made of stainless steel

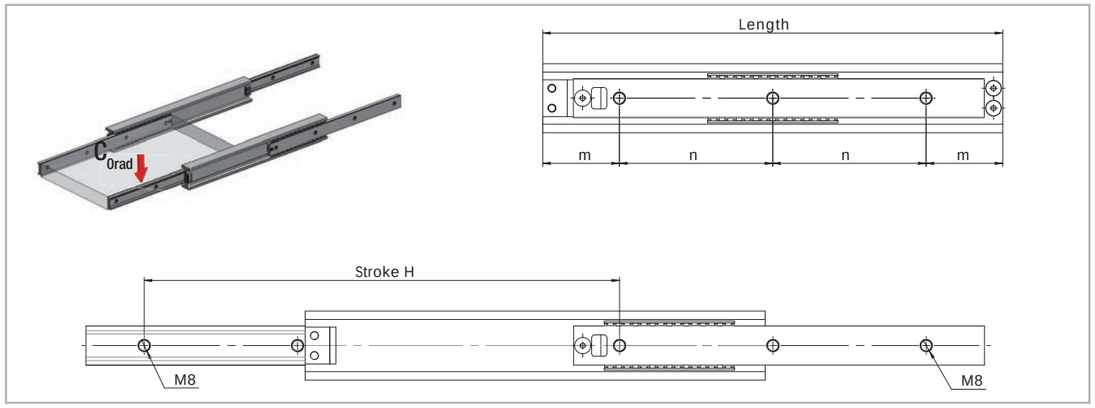

Fig. 92

Type	Size	Length L [mm]	Stroke H [mm]	Load capacity per pair C_{0rad} [N]	Load capacity per pair C_{0ax} [N]	m [mm]	n [mm]	Number of holes
LTH...S	45	300	310	1316	on request	50	100	3
		350	366	1832		75		
		400	422	1666		50		4
		450	456	2154		75		
		500	512	1972		50		5
		550	568	2200		75		
		600	624	2204		50		6
		650	680	2426		75		
		700	714	2942		50		7
		750	770	3084		75		
		800	826	2860		50		8
		850	882	2666		75		
		900	916	2614		50		9
		950	972	2450		75		
		1000	1028	2306		50		10
		1050	1084	2178		75		
		1100	1118	2144		50		11
		1150	1174	2034		75		
		1200	1230	1934		50		12
		1250	1286	1842		75		
		1300	1320	1818		50		13
		1350	1376	1738		75		
		1400	1410	1716		50		14
		1450	1488	1596		75		
		1500	1522	1578		50		15

Tab. 49

LTH

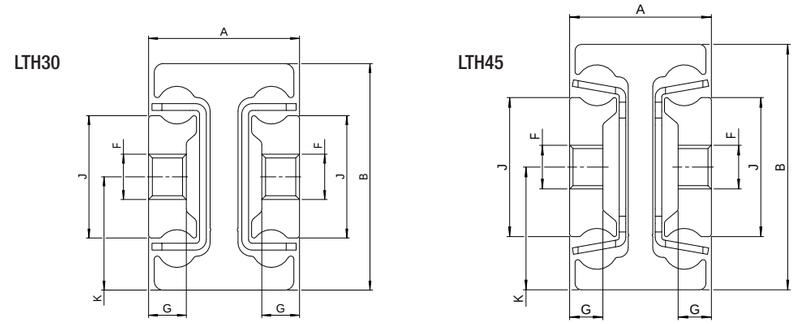

All dimensions are indicated in mm

Fig. 93

Type	Size	A	B	J	G	K	F	Weight per single guide [kg/m]
LTH	30	20	30	16.2	5.0	15.0	M6	3.5
	45	26	45	25.5	6.1	22.5	M8	6.0

Tab. 50

HGT060, HGT080, HGT100, HGT120, HGT150, HGT200, HGT240

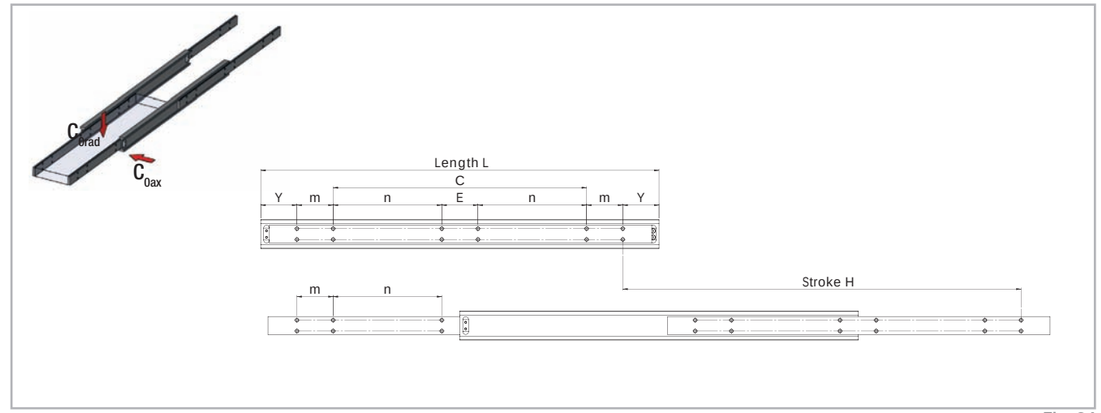

All dimensions are indicated in mm

Fig. 94

Type	Size	Length L [mm]	Stroke H [mm]	Load capacity per pair C_{0rad} [N]	Load capacity per pair C_{0ax} [N]	Y	m	n	E	C	Number of holes
HGT	60	400	400	5250	60 % C_{0rad}	50	50	-	-	200	8
		450	450	5350						250	
		500	500	5400						300	
		550	550	5500				150	50	-	12
		600	600	5400				175			
		650	650	5350				200			
		700	700	5250				225			
		750	750	5100				250			
		800	800	4900				275			
		850	850	4700				300			
		900	900	4500				325			
		950	950	4300				350			
		1000	1000	4050				375			
		1100	1100	3700				425			
		1200	1200	3300				475			
		1300	1300	2900				525			
		1400	1400	2500				575			
		1500	1500	2100				625			

The load capacity for aluminum is 40 % and for stainless steel 60 % of the stated values, if available in this material variant (see Technical features overview).

Tab. 51

Type	Size	Length L [mm]	Stroke H [mm]	Load capacity per pair C_{0rad} [N]	Load capacity per pair C_{0ax} [N]	Y	m	n	E	C	Number of holes
HGT	80	500	500	9000	60 % C_{0rad}	100	100	-	-	100	8
		550	550	9250						150	
		600	600	9350						200	
		650	650	9200						250	
		700	700	9050						300	
		750	750	8800						350	
		800	800	8600						400	
		850	850	8350						450	
		900	900	8100						500	
		950	950	7850						550	
		1000	1000	7550						600	
		1100	1100	7150				300	100	-	12
		1200	1200	6700				350			
		1300	1300	6200				400			
		1400	1400	5700				450			
		1500	1500	5200				500			
		1600	1600	4600				550			
		1700	1700	4100				600			
		1800	1800	3600				650			
		1900	1900	3000				700			
		2000	2000	2500				750			

The load capacity for aluminum is 40 % and for stainless steel 60 % of the stated values, if available in this material variant (see Technical features overview).

Tab. 52

Type	Size	Length L [mm]	Stroke H [mm]	Load capacity per pair C_{0rad} [N]	Load capacity per pair C_{0ax} [N]	Y	m	n	E	C	Number of holes
HGT	100	700	700	11000	60 % C_{0rad}	100	200	-	-	100	8
		750	750	10750						150	
		800	800	10500						200	
		850	850	10250						250	
		900	900	10000						300	
		950	950	9750						350	
		1000	1000	9500						400	
		1100	1100	9000				150	200	-	12
		1200	1200	8500				200			
		1300	1300	7900				250			
		1400	1400	7300				300			
		1500	1500	6700				350			
		1600	1600	6100				400			
		1700	1700	5450				450			
		1800	1800	4800				500			
		1900	1900	4100				550			
		2000	2000	3400				600			

The load capacity for aluminum is 40 % and for stainless steel 60 % of the stated values, if available in this material variant (see Technical features overview).

Tab. 53

Other sizes and versions are available on request

Type	Size	Length L [mm]	Load capacity per pair C_{0rad} [N]	Load capacity per pair C_{0ax} [N]
HGT	120	700	11500	60 % C_{0rad}
		⋮	⋮	
		2000	4700	
HGT	150	700	13900	60 % C_{0rad}
		⋮	⋮	
		2000	7000	
HGT	200	700	15000	60 % C_{0rad}
		⋮	⋮	
		2300	6700	

The load capacity for aluminum is 40 % and for stainless steel 60 % of the stated values, if available in this material variant (see Technical features overview).

Tab. 54

Type	Size	Length L [mm]	Load capacity per pair C_{0rad} [N]	Load capacity per pair C_{0ax} [N]
HGT	240	700	17500	60 % C_{0rad}
		⋮	⋮	
		2000	12500	

Tab. 55

The load capacity for aluminum is 40 % and for stainless steel 60 % of the stated values, if available in this material variant (see Technical features overview).

HGT

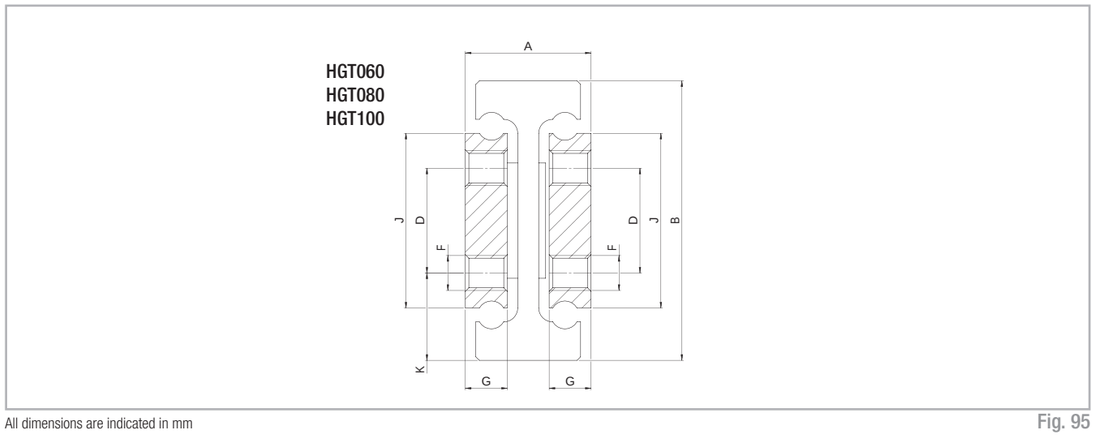

All dimensions are indicated in mm

Fig. 95

Type	Size	A	B	J	G	K	D	F	Weight per single guide [kg/m]
HGT	60	32	60	40	10	19	22	M6	11.70
	80	38	80	50	12	25	30	M10	17.50
	100	44	100	70	15	27.5	45		27.60

Tab. 56

LTF44

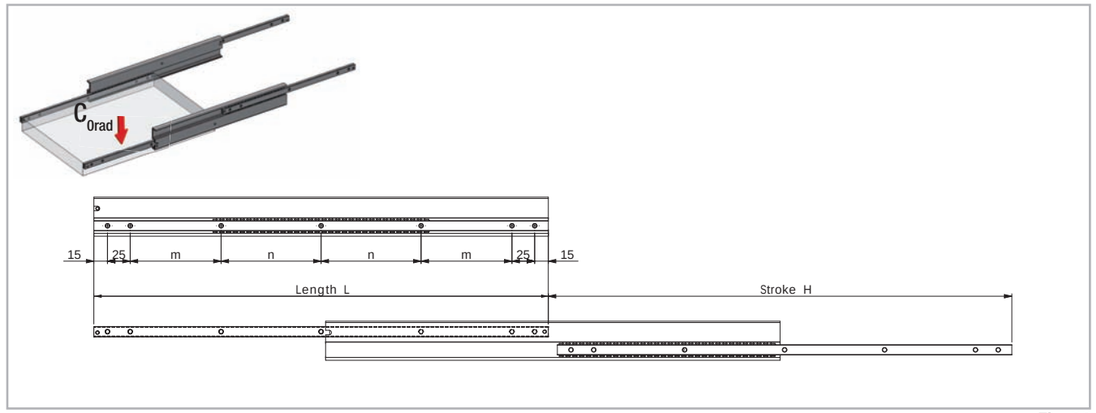

All dimensions are indicated in mm

Fig. 96

Type	Size	Length L [mm]	Stroke H [mm]	Load capacity per pair C_{0rad} [N]	Fixed and moving rails m [mm]	Fixed and moving rails n [mm]	Number of holes
LTF	44	200	210	228	60	-	5
		225	235	260	72.5		
		250	260	288	85		
		275	285	324	97.5		
		300	310	360	110		
		325	335	392	122.5		
		350	360	420	135		
		375	385	452	147.5		
		400	410	492	160		
		425	435	524	172.5		
		450	460	552	185		
		500	510	624	100	110	7
		550	560	684		135	
		600	610	768		160	
		650	660	816		185	
		700	710	888	150	160	
		750	760	948		185	
		800	810	1020		210	
		850	860	1080		235	
		900	910	1152		260	
		950	960	1224		285	
		1000	1010	1296		310	

Tab. 57

LTF44

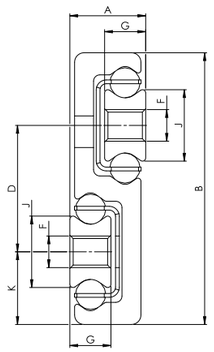

All dimensions are indicated in mm

Fig. 97

Type	Size	A	B	J	G	K	D	F	Weight per single guide [kg/m]
LTF44	44	12	43	11.3	6.5	11.5	20	M5	2.7

Tab. 58

HGS060, HGS080, HGS100

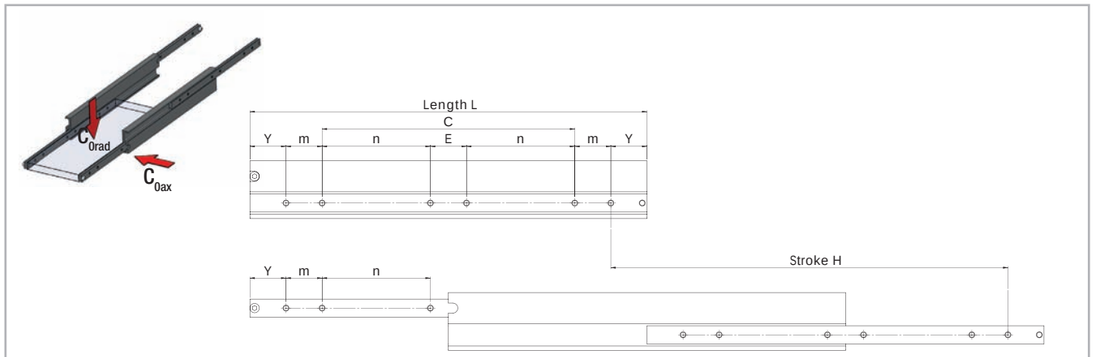

All dimensions are indicated in mm

Fig. 98

Type	Size	Length L [mm]	Stroke H [mm]	Load capacity per pair C_{0rad} [N]	Y	m	n	E	C	Number of holes
HGS	60	250	250	1000	50	50	-	-	50	4
		300	300	1250					100	
		350	350	1350					150	
		400	400	1400					200	
		450	450	1400					250	
		500	500	1400					300	
		550	550	1350			150	50	-	6
		600	600	1300			175			
		650	650	1250			200			
		700	700	1200			225			
		750	750	1150			250			
		800	800	1050			275			
		850	850	950			300			
		900	900	850			325			
		950	950	750			350			
		1000	1000	650			375			

The load capacity for aluminum is 40 % and for stainless steel 60 % of the stated values, if available in this material variant (see Technical features overview).

Tab. 59

HR

Type	Size	Length L [mm]	Stroke H [mm]	Load capacity per pair C_{0rad} [N]	Y	m	n	E	C	Number of holes
HGS	80	250	250	1600	50	50	-	-	50	4
		300	300	2000					100	
		350	350	2200					150	
		400	400	2350					200	
		450	450	2450					250	
		500	500	2450					300	
		550	550	2450			150	50	-	6
		600	600	2400			175			
		650	650	2300			200			
		700	700	2200			225			
		750	750	2100			250			
		800	800	2000			275			
		850	850	1900			300			
		900	900	1800			325			
		950	950	1650			350			
		1000	1000	1500			375			
HGS	100	400	400	3200	50	50	-	-	200	4
		450	450	3500					250	
		500	500	3600					300	
		550	550	3600			150	50	-	6
		600	600	3550			175			
		650	650	3450			200			
		700	700	3300			225			
		750	750	3150			250			
		800	800	3000			275			
		850	850	2850			300			
		900	900	2700			325			
		950	950	2550			350			
		1000	1000	2400			375			
		1100	1100	2250			425			
		1200	1200	2100			475			
		1300	1300	1950			525			
		1400	1400	1850			575			
		1500	1500	1600			625			

The load capacity for aluminum is 40 % and for stainless steel 60 % of the stated values, if available in this material variant (see Technical features overview).

Tab. 60

HGS

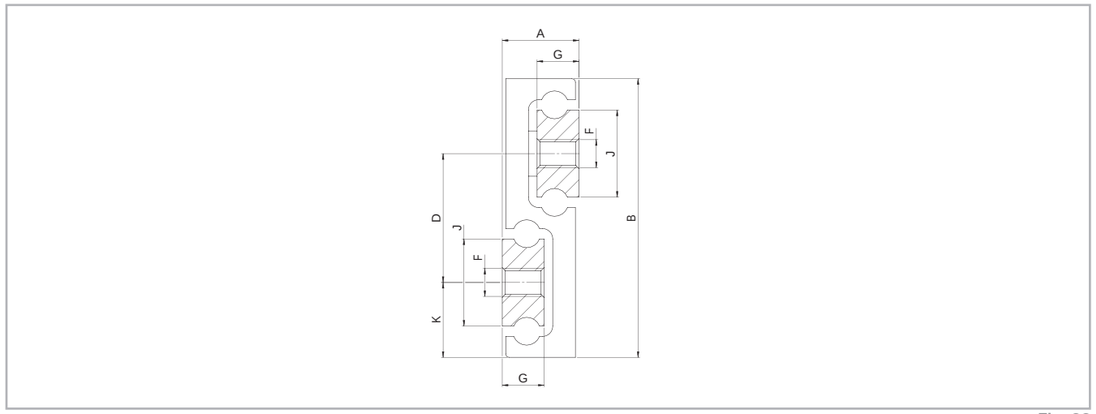

All dimensions are indicated in mm

Fig. 99

Type	Size	A	B	J	G	K	D	F	Weight per single guide [kg/m]
HGS	60	17	60	16	10	16	28	M6	6.00
	80	22	80	25	12	21.5	37	M8	10.50
	100	24	100	32		26	48		14.20

Tab. 61

Accessories

Available options (depending on telescope version)

Locking

Locking mechanisms make it possible to lock the Hegra rails in the end position. This prevents inadvertent extension or retraction of the rail in any case. Locking mechanisms can be implemented as locking bolts or bars. This ensures personal safety and protection of materials, especially in moving installations, as in vehicles. For models HGT with locking please observe right or left side use.

Fig. 100

Fig. 101

Driving disc

In the full extension rails with dual stroke the intermediate element does not follow a particular order. The exact position of the element is therefore defined only in fully extended condition. The optional driving disc defines the movement of the intermediate element. This prevents unwanted protrusion of the element. An example for use of the driving disc is in warehouse rails, which are extended in both directions.

Fig. 102

Fig. 103

Damping

Hegra telescoping rails can be equipped with damped end stops in closed position. Plastic or elastomer damping elements provide for quieter operation, a softer end stop when pushing in the rail and higher resistance at the end of the stroke.

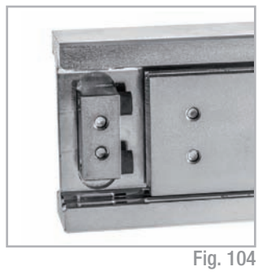

Fig. 104

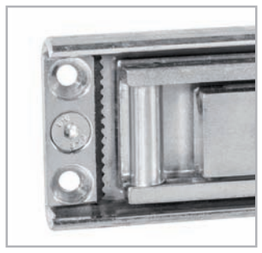

Fig. 105

Snap

Hegra Rail telescopic guides can be partial with a snap through a ball thrust piece. Thus, an unintended process of the telescope system is avoided.

Note: Not all accessories (interlocks, damping, Drive disk, snap) can be combined with each other and available. (see Technical features overview) Please contact our technical service.

Technical information

Selecting a suitable telescoping rail

To find a telescoping rail that meets your requirements, the following factors must be considered.

- Desired load capacity
- Available sizes (height, width and rail length)
- Required extension type (partial, full extension, etc.)
- Length of travel
- Desired material and surface

Mounting tolerances

Installation length (mm)	≥ 150 < 420	≥ 420 < 1050	≥ 1050 < 2840
Tolerance (mm)	± 0.5	± 0.8	± 1.2

At the installation, width tolerances of ± 0.5 mm for compensating are to be considered. For all other dimensions, the tolerances according to DIN ISO 2768-1 (m) apply.

Life cycle

The life cycle describes the time span from installation to failure of the telescoping rail, due to wear.

The life cycle is affected by the following factors.

- Load
- Assembly precision
- Parallelism when installed in pairs
- Rigidity of the connection construction
- Jolts and vibrations
- Operating temperature
- Lubrication (in accordance with maintenance intervals)

Load capacity

The specified maximum load capacity always refers to one pair of vertically installed telescoping rails. To achieve this capacity, the following requirements must be fulfilled.

- An absolutely rigid connection construction
- Even distribution of the load over the entire length of the moving rail element
- Mounting of the telescoping rails on a flat and rigid surface using all provided mounting holes
- Please be sure to use the correct screw length to prevent damage to the ball cage: shank length of screw < thickness of the moving element
- Vertical installation of telescoping rails

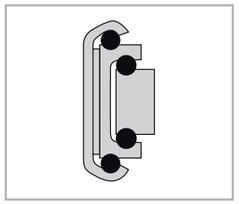

Vertical installation Fig. 106

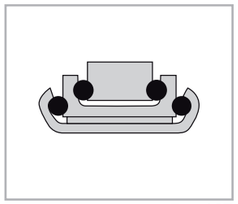

Level installation Fig. 107

If optimal implementation of all of these requirements is not possible, we will be glad to assist you in calculating the actual load capacity.

In case of a level installation of the telescoping rails, only 50 % of the permissible load values is possible, depending on the type.

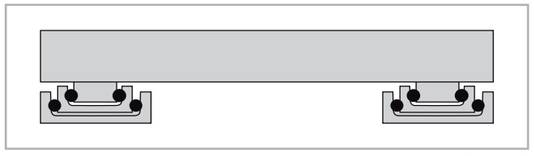

Fig. 108

Deflection

If the rails are installed in pairs and the requirements under “Load capacity” are taken into account, the maximum deflection of steel rails under full load is 1 % of the extended length (stroke). Example: 500 mm length of travel -> max. 5 mm deflection under full load.

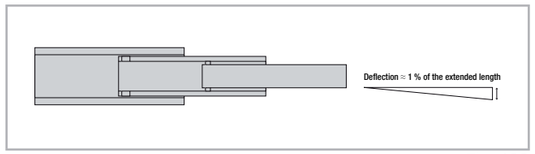

Fig. 109

Operating temperature

The telescoping rails can be used at ambient temperatures from 0 °C to +170 °C (32 °F to +338 °F). At lower temperatures down to -30 °C (-22 °F) or higher temperatures up to +250 °C (+482 °F), please contact our application engineers. These ranges always require the use of a special lubricant.

The operating temperature is -20 ° C to + 50 ° C (-4 ° F to + 122 ° F) when damping is used.

Corrosion protection

As standard features, all series are zinc electroplated, thick-film passivated and Reach/RoHs compliant. For higher corrosion protection we offer zinc nickel plating with stainless steel balls. Overview of available coatings:

Coating type thickness 12-15µm	Salt-spray test DIN EN ISO 9227	Reach/ RoHS
Thick-film passivated	ca. 400 hours	yes
Zinc nickel	more than 700 h	yes

Tab. 62

Ball cage displacement

The stroke movement of a telescoping rail is achieved by the ball cages, among other elements. You should ensure that the telescoping rail is always fully extended and retracted, since otherwise the ball cages can become displaced. Ball cage displacement occurs as a result of slippage and means that you can achieve the required extension length and the desired closed condition of the telescoping rail only with increased application of force.

Automated systems must have sufficient reserve driving force or an additional maximum stroke must be planned for in order to prevent displacement.

On request we also implement custom design solutions. Feel free to contact us.

Moving force

The moving force is subject to production-related tolerances and is also defined by the load and the deflection of a telescoping rail. Taking into account the load and deflection of a telescoping rail, the closing force is higher than the opening force, since deflection occurs under load and closing takes place by pushing against a slanted plane.

Lubrication

Alternative lubricants, for example for the food industry, or alternate temperature ranges are available on request. Our aluminium or stainless steel telescoping rails are generally delivered without grease.

Maintenance intervals

A visual inspection should be conducted occasionally; foreign particles should be removed and “dry” guide rails should be lightly lubricated with roller bearing grease. This prevents friction, protects the components and prolongs the life of the system. The lubrication intervals are variable and should be determined based on the respective operating conditions such as load, ambient conditions, travel speed, temperature, pollution, etc.

Mounting instructions

- Please use all mounting holes, in addition to screws of the correct length.
- A stable base is necessary for mounting the telescoping rails.
- In the connection construction, be aware that we have switched to counterbores according to DIN 74 Form F and due to the material thickness of our profiles, the head of the countersunk screw protrudes somewhat from the profile, so that the mating piece must have a corresponding counterbore.

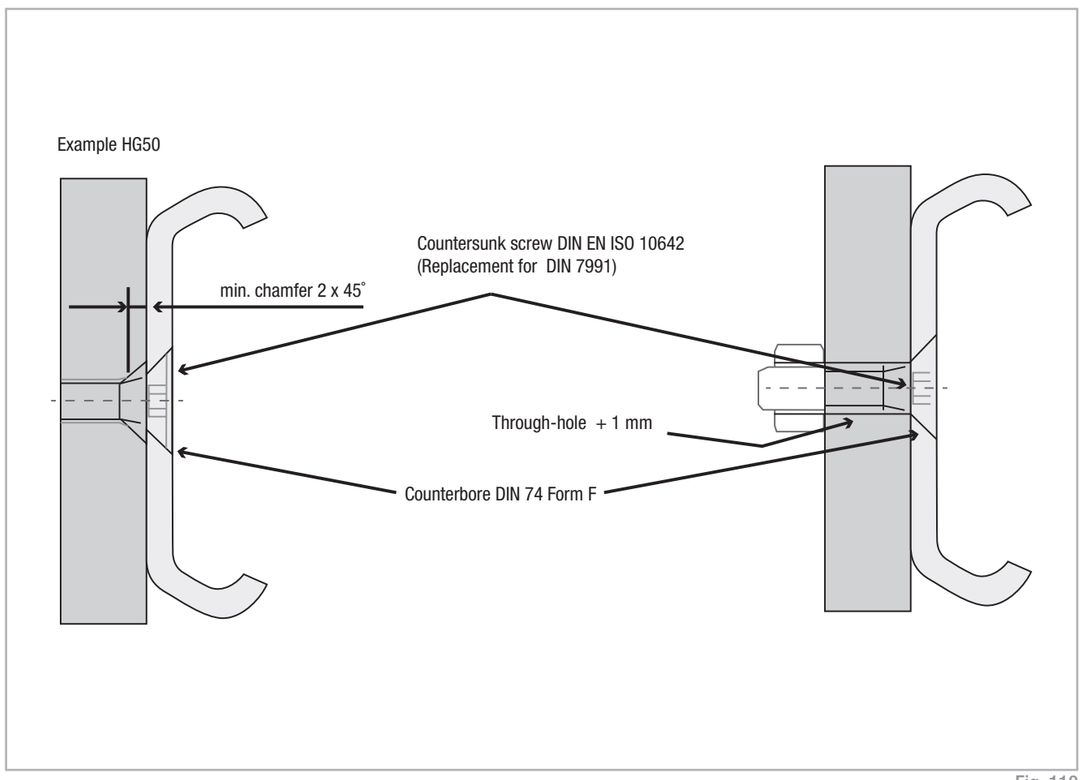

Fig. 110

Ordering key

Hegra Rail

HGTX080	0500	0600	EG	VO	DG	B	Z	R	
									right or left version
								alternate coating	
							stroke in both directions		
						damping			
					locking				
				snap					
			alternate stroke						
		closed length							
type with material and size									

Note on ordering: The size is always indicated as 3 digits, the length of the rail and the stroke are always 4 digits with the 0 prefixes.
Not all fileds must be filled out. If they are not used, they remain empty.
Ordering example: HGTX080-0500-0600-EG-VO-DG-B-Z-R

Type	
HTT	partial extension machined/drawn profile
HTC	partial extension c-profile
HVB	full extension outer c-profiles
HVD	full extension double c-profile
HVC	full extension single c-profile
HVT	full extension machined/drawn profile
H1D	over extension 150 % double c-profile
H1C	over extension 150 % single c-profile
H1T	over extension 150 % machined/drawn profile
H2H	over extension 200 % machined/drawn profile
LTH	heavy duty slide
HGT	heavy duty slide
LTF	s-profile
HGS	s-profile

Material	
	steel
A	aluminum
X*	stainless steel

* Different stainless steels, such as the “electropolishing” option, are available, please contact our technical service.

Accessory	
	no accessory
EO	snap on opened position
EG	snap on closed position
EB	snap on closed an opened position
VO	locking opened position
VG	locking closed position
VB	locking on closed an opened position
DG	damping closed position
B	stroke on closed an opened position
BM	stroke on closed an opened position with synchronization

Coating	
	thick-film passivation
Z	zinc nickel
N	nickel
E	anodizing colorless

Layout	
L	left version
R	right version

Special/Configuration	
S01	special (according to drawing)
C01	configuration (special stroke, stainless steel balls, special grease)

Notes

ROLLON®

Linear Evolution

Light Rail

Product explanation

Light telescopic rails, with full or partial extension

Fig. 1

The Light Rail product family consists of five series with full and partial extensions in a lightweight design. It is ideal for applications in which the mass of the rail is just as important as the bending rigidity.

The most important characteristics:

- Light and quiet running with heavy loads
- Long service life without maintenance
- Effective self-cleaning of the ball track
- High functional reliability
- Structural elasticity capable of absorbing minor impacts and absence of permanent deformation
- Not sensitive to side impacts

Preferred areas of application:

- Beverage industry
- Automotive
- Construction and machine technology (e.g., housing)
- Packaging machines
- Railcars (e. g., maintenance and battery extensions)
- Special machines

LPS 38

Partial extension with rails made of hot-dipped galvanized steel and plastic ball cages.

Fig. 2

LFS 46

Detachable internal rail which can be released with a latch. Rails are made of bright chrome-plated steel, the ball cages of steel and plastic. Roll back protection in closed position.

Fig. 3

LFS 57

Full extension with rails made of hot-dipped galvanized steel and zinc-plated steel ball cages. Roll back protection in closed position.

Fig. 4

LFS 58 SC

Full extension with automatic retraction and damping. The automatic retraction system is assisted by a spring-loaded mechanism that allows the rail to get back to a complete retraction before reaching the closed position.

Fig. 5

LFS 70

Full extension with rails made of zinc-plated galvanized and blue passivated steel. The ball cages are made of zinc-plated steel. Heavy load end stop in opened and closed position. Roll back protection in closed position.

Fig. 6

LFX 27

The stainless steel full extension consists of two inner guide rails that, connected to a double-T profile, form the intermediate element and two outer rails that form the connection to the connecting construction as fixed and moving element. The square cross-section allows a compact design of high load ratings and low deflection.

Fig. 7

DRX-DRS

Roller type telescopic rail made of stainless or galvanized steel. Corrosion resistant even if scratched, exposed to solvents or to shocks.

Fig. 8

Overview product cross sections

Partial extension guides

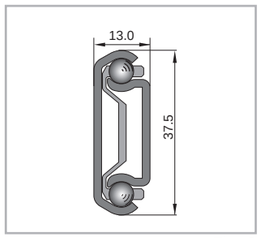

Fig. 9

LPS38

Load capacities p. LR-6

Full extension guides

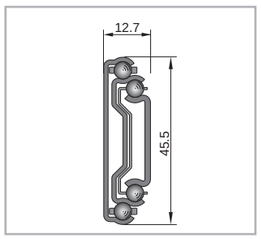

Fig. 10

LFS46

Load capacities p. LR-7

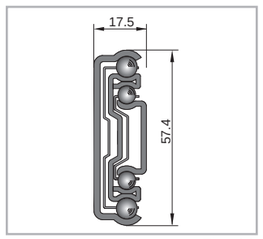

Fig. 11

LFS57

Load capacities p. LR-8

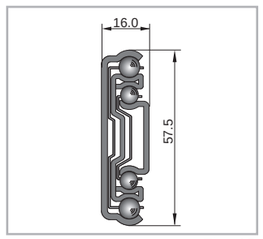

Fig. 12

LFS58

Load capacities p. LR-9

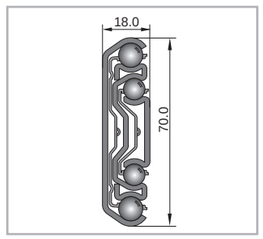

Fig. 13

LFS70

Load capacities p. LR-10

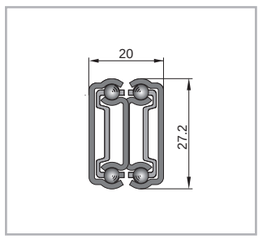

Fig. 14

LFX27

Load capacities p. LR-11

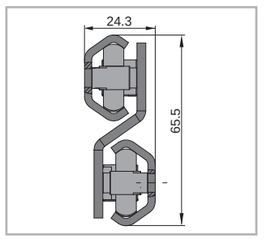

Fig. 15

DRX/DRS30

Load capacities p. LR-12

Technical data

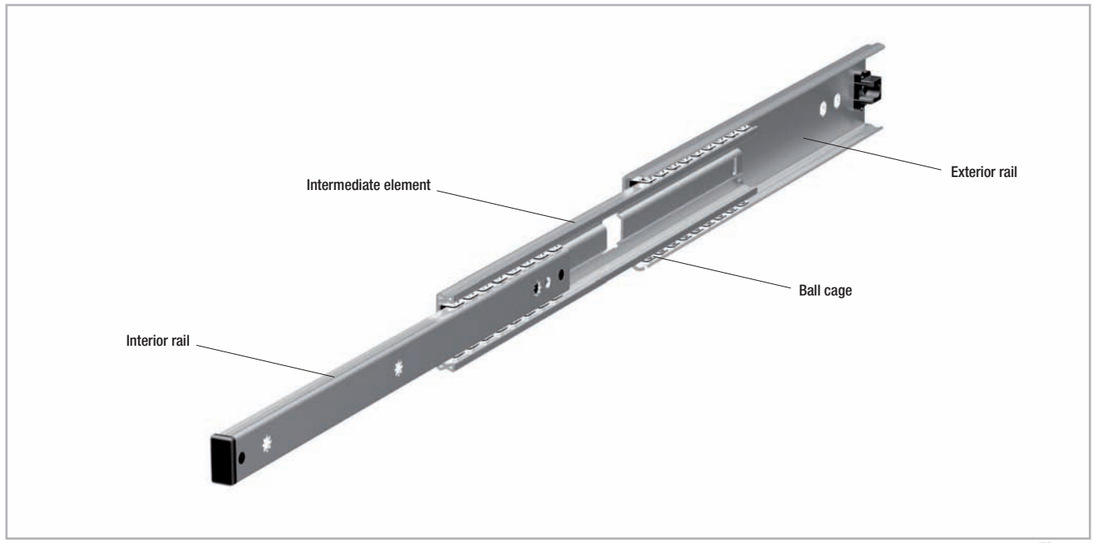

Fig. 16

Performance characteristics:

- Extension speed (depending on application):
  Extension distance 100 - 500 mm: max. 0.5 m/s (19.69 in/s)
  Extension distance 600 mm: max. 0.4 m/s (15.75 in/s)
  Extension distance 700 mm: max. 0.3 m/s (11.81 in/s)
- LFS 58 SC series with automatic retraction
- Temperature range: from +10 °C to +40 °C,
  for DRX/DRS from -20° to + 100° C, for LFX from -30° to +200° C.
- Temporary storage and transport temperature: -20 °C to max. +80 °C (-4 °F to +176 °F)
- All systems are lubricated for life
- LFS/LPS rail material: hot galvanized or chromed steel
- LFS/LPS ball bearing cage material: galvanized steel or plastic
- LFS/LPS ball bearing material: hardened carbon steel
- LFX rail, balls and cage material: stainless steel 1.4301
- DRX rail material: stainless steel AISI 316L
- DRS rail material: galvanized steel ISO 2081 compliant

Remarks:

- All load capacity data are based on a pair of telescopic rails
- Assembly in cross-sectional width, here a positive tolerance of +0.5 mm is recommended (mounted under tension). If the extensions are installed with too small a tolerance, the service life is decreased
- Cycle data applies to the use of an extension pair (recommended)
- Vertical use of extensions (radial load) is recommended
- If mounted in a horizontal position, the load capacity will be reduced (see p. LR-13)
- Cathodic edge protection, additional corrosion protection with powder coating on request
- Roll back protection in closed position is friction locked (except LPS 38)
- Not suitable for moments – must be used as extension pair

Dimensions and load capacity

LPS 38

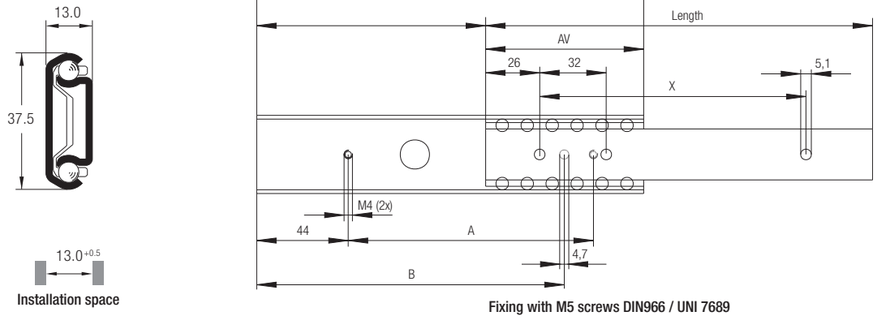

All dimensions given in mm

Fig. 17

Type	Size	Length [mm]	Extension loss AV [mm]	Stroke* [mm]	A [mm]	B [mm]	X [mm]	Load capacity for a pair of rails C_{0rad} [N]	Load capacity for a pair of rails C_{0ax} [N]	Weight per single guide [kg]
LPS	38	242	88	154	166	202	192	350	100	0.30
		317		229	241	277	256			0.40
		398	100	298	322	358	352			0.50
		473		373	397	433	416			0.60

* The stroke is the difference of the length and the extension loss AV

Tab. 1

Note: The given load capacities are guidelines with 100,000 cycles and uniform load distribution (area load) when using all mounting holes. The load values must be reduced in unfavorable conditions.

LFS 46

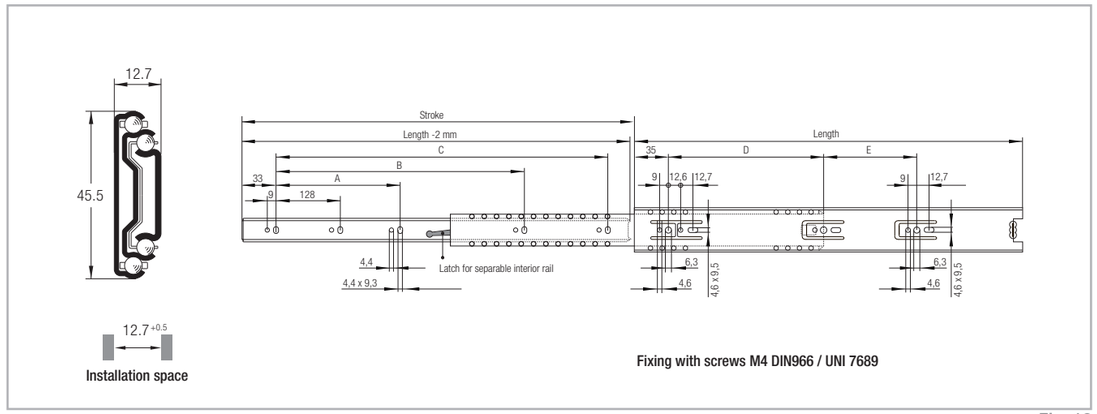

All dimensions given in mm

Fig. 18

Type	Size	Length [mm]	Stroke [mm]	A [mm]	B [mm]	C [mm]	D [mm]	E [mm]	Load capacity for a pair of rails C_{0rad} [N]	Load capacity for a pair of rails C_{0ax} [N]	Weight per single guide [kg]
LFS	46	300	305	-	-	242	192	-	300	100	0,48
		350	356	-	-	292	256	-	300		0,505
		400	406	-	256	342	160	96	350		0,64
		450	457	-		392		160			0,71
		500	508	-	352	442	224	128			0,79
		550	559	224	416	492		192	400		0,88
		600	610			542		224			0,95

Tab. 2

Note: The given load capacities are guidelines with 50,000 cycles and uniform load distribution (area load) when using all mounting holes. The load values must be reduced in unfavorable conditions.

LFS 57

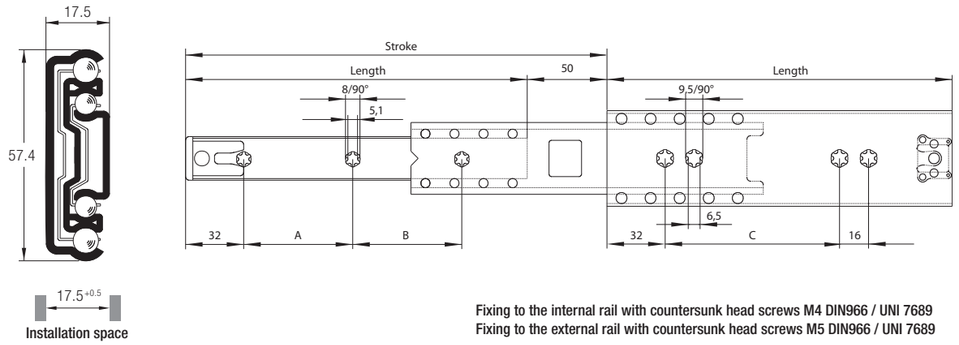

All dimensions given in mm

Fig. 19

Type	Size	Length [mm]	Stroke* [mm]	A [mm]	B [mm]	C [mm]	Load capacity for a pair of rails C_{0rad} [N]	Load capacity for a pair of rails C_{0ax} [N]	Weight per single guide [kg]
LFS	57	300	350	128	104	160	500	160	0.84
		350	400		152		600		0.98
		400	450	160	168	256	650		1.13
		450	500		224		700		1.27
		500	550	224	208	384	750		1.42
		550	600		256				1.57
		600	650	288	240		800		1.71
		650	700		288				1.86
		700	750	320	312				2.01
		750	800		360				2.16

* The stroke is the sum of the length and the over extension

Tab. 3

Note: The given load capacities are guidelines with 100,000 cycles and uniform load distribution (area load) when using all mounting holes. The load values must be reduced in unfavorable conditions.

LFS 58 SC

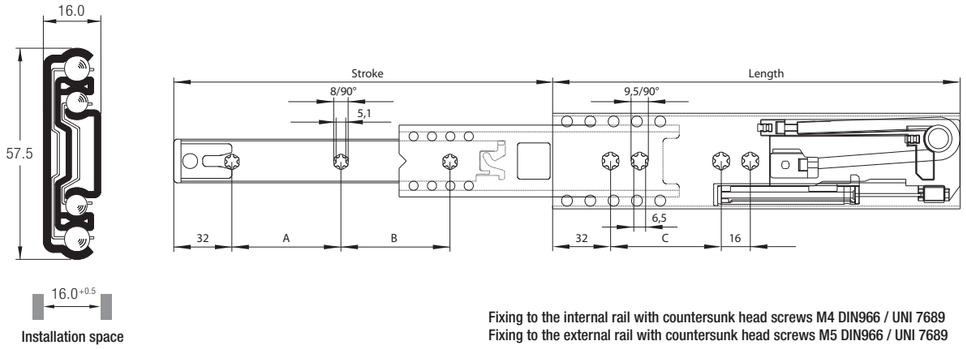

All dimensions given in mm

Fig. 20

Type	Size	Length [mm]	Stroke [mm]	A [mm]	B [mm]	C [mm]	Load capacity for a pair of rails C_{0rad} [N]	Weight per single guide [kg]
LFS	58	400	434	128	128	224	400	1.10
		450	484	160	160	256	500	1.25
		500	534		192	320	550	1.40
		550	584	192			600	1.55

Tab. 4

Note: The given load capacities are guidelines with 100,000 cycles and uniform load distribution (area load) when using all mounting holes. The load values must be reduced in unfavorable conditions. Horizontal installation is not possible due to the damping system. The damping effect is reduced for loads of 450 N and higher per extension pair.

LFS 70

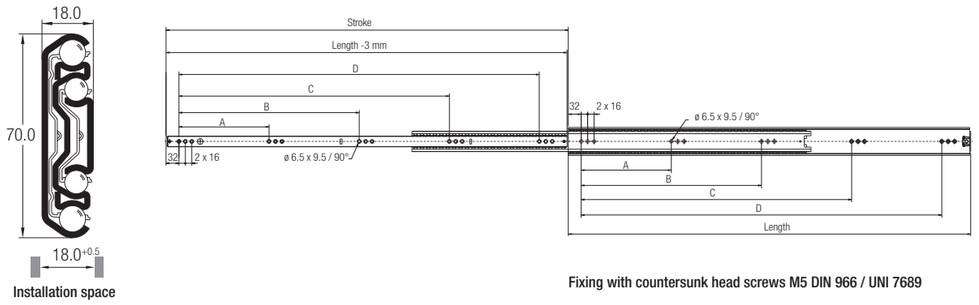

All dimensions given in mm

Fig. 21

Type	Size	Length [mm]	Stroke [mm]	A [mm]	B [mm]	C [mm]	D [mm]	Load capacity for a pair of rails C_{0rad} [N]		Load capacity for a pair of rails C_{0ax} [N]	Weight per single guide [kg]
		400	400	-	-	-	288	1050	1800*		1,55
		450	450	-	-	160	320	1150	1900*		1,74
		500	500	-	-	192	384		1950*		1,94
LFS	70	550	550	-	-	224	448	1300	2000*	300	2,13
		600	600	-	-				1950*		2,32
		700	700	-	192	384	576		1750*		2,70
		800	800	-	224	448	672	1200	1450*		3,10
		1100	1100	224	448	672	896	900	1050*	200	4,25

* 10.000 cycles

Tab. 5

Note: The given load capacities are guidelines with 100.000 cycles and uniform load distribution (area load) when using all mounting holes. The load values must be reduced in unfavorable conditions.

LFX 27

Stainless steel telescopic guide

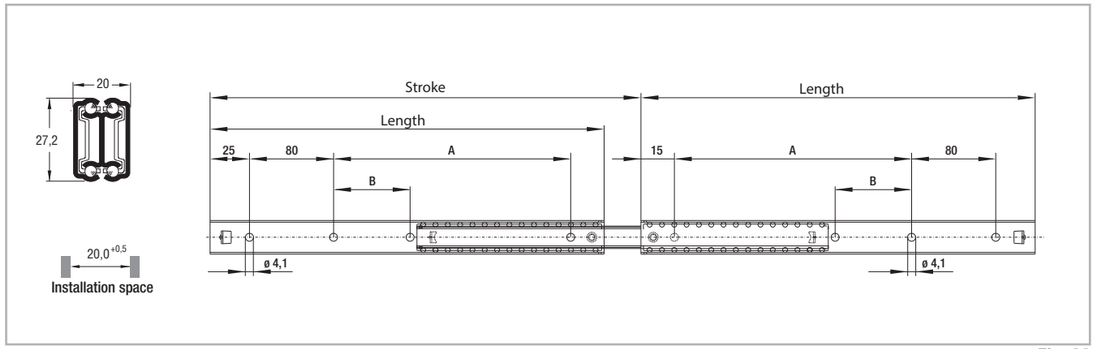

Fig. 22

Type	Size	Length [mm]	Stroke [mm]	A [mm]	B [mm]	Load capacity for a pair of rails [N]				Weight per single guide [kg]
						C_{0rad}	C_{0ax}	C_{0rad}	C_{0ax}	
						to 10.000 cycles		to 100.000 cycles		
		300	326	180	-					0,43
		350	376	230	70					0,49
		400	426	280	100					0,57
LFX	27	450	476	330	100	350	50	250	50	0,64
		500	526	380	140					0,72
		550	576	430	160					0,76

Tab. 6

DRX/DRS

DRX version in stainless steel

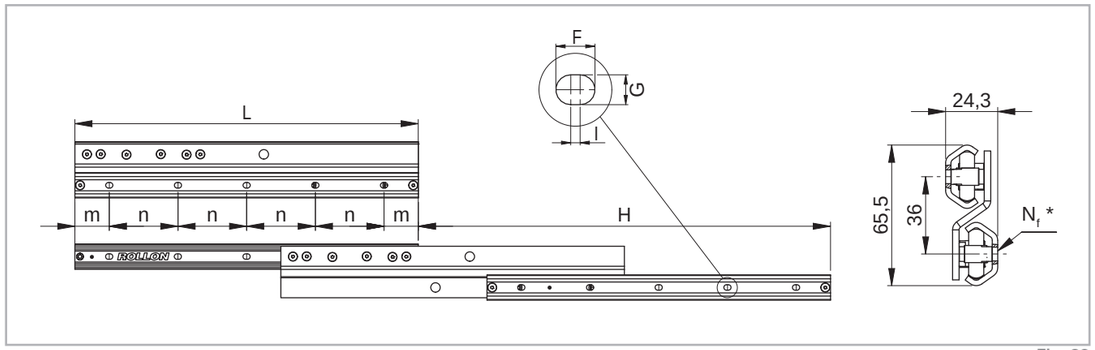

* Number of mounting holes

Fig. 23

Type	Size	Length L [mm]	Stroke H [mm]	Load capacity for a pair of rails C_{0rad} [N]	Fixed and movable rail							
					m [mm]	n [mm]	N_f [2 rails]	Holes for screws	Weight per single guide [kg/m]	F [mm]	G [mm]	I [mm]
DRX DRS	30	400	480	300	40	80	10	M5	3.40	8,4	6,4	2
		480	560	400			12					
		560	640	480			14					
		640	720	560			16					
		720	800	640			18					
		800	880	720			20					
		880	960	700			22					
		960	1040	620			24					
		1040	1120	500			26					

Tab. 7

Fixing screws

We recommend fixing screws according to ISO 7380 with low head height or TORX® screws (see fig. 24) on request.

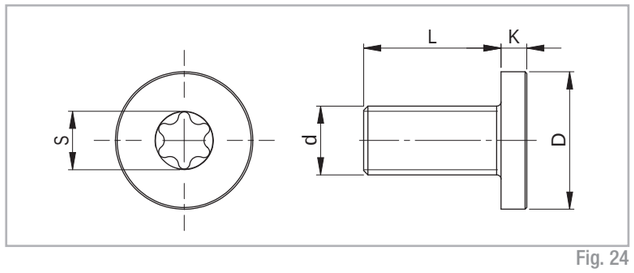

Fig. 24

Rail size	Screw type	d	D [mm]	L [mm]	K [mm]	S	Tightening torque [Nm]
30	M5 x 10	M5 x 0.8	10	10	2	T25	9

Tab. 8

Technical instructions

Load capacities

Vertical installation (radial load)

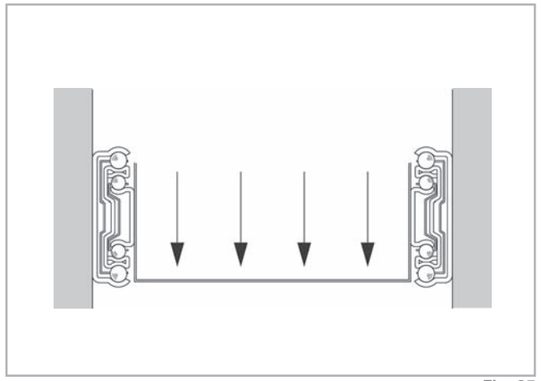

Fig. 25

The given loading capacities are guidelines for a pair of rails vertically mounted with uniform load distribution using all mounting holes. The load values must be reduced in unfavorable conditions.

Horizontal installation (axial load)

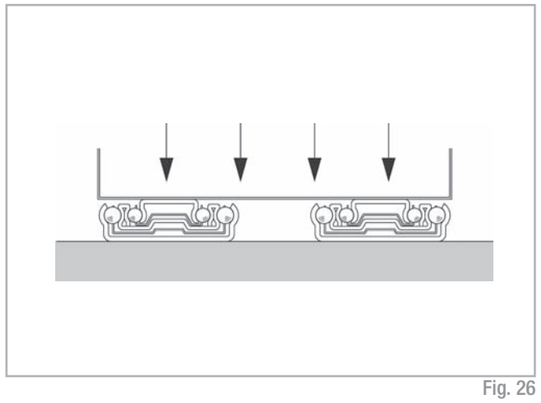

Fig. 26

For horizontal mounted extensions the load capacity is reduced (see pg. LR-6ff).

The DRS/DRX series is not suitable for use on horizontal mounting (axial loads)

Speed

The extension speed is determined by the size of the intermediate elements. Therefore, the maximum extension speed is inversely proportional to the overall extension of the rails (see fig. 27). The maximum extension speed is also directly related to the applied load and operating time. The indicated data refers to continuous operation at the maximum load capacity.

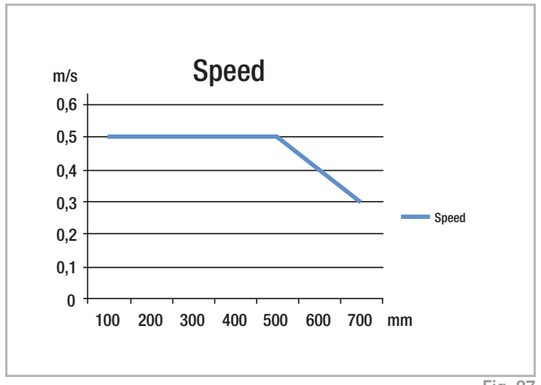

Fig. 27

Temperature

Continual operating temperature of the Light Rail extensions is +10 °C to +40 °C. Temporary storage and transport temperature: -20 °C to max. +80 °C. The operating temperature for the DRX/DRS rails ranges from - 20 °C to + 100 °C. For more information please contact Rollon technical support.

Lubrication

All extensions of the Light Rail product family are lubricated for life.
Different lubricants for special applications are available upon request.
Example: Lubricant with FDA approval for use in the food industry.
For more information please contact Rollon technical support.

Corrosion protection

Base material for the Light Rail product family is cold-rolled, hot-dipped galvanized steel. The cathodic edge protection offers a perfect combination of quality and cost-efficiency. The surface protection conforms to RoHS. The DRX/DRS series rails are also available in the stainless steel version for a high corrosion resistance.
For more information please contact Rollon technical support.

Installation instructions

- The existing internal stops are not designed to stop the moving load. They are only supposed to retain the ball-cage and prevent the internal parts to slide out of the assembly. An external end-stop must always be installed to stop the moving load.
- To achieve optimum running properties, high service life and rigidity, it is necessary to fix the Light Rail extensions with all accessible holes on a rigid and level surface. Please observe the parallelism of the installation surfaces. The fixed and movable rails fit to the rigid assembly construction.
- Light Rail full and partial extensions are suitable for use in automatic systems. For this, the stroke should remain constant in all moving cycles and the extension speed must be checked (see pg. LR-14, fig.27). The movement of the extensions is enabled by internal ball cages, which could experience an offset from the original position with differing strokes. This phase offset can have a negative effect on the running properties or limit the stroke. If differing strokes occur in an application, the drive force must be sufficiently dimensioned in order to appropriately synchronize the ball cage offset. As an alternative, an extra full stroke cycle can be performed every certain number of cycles, in order to re-phase the ball cage in its correct position.

Horizontally installed guides

Horizontally intalled extesions can support tension or compression loads (see figs. 28 and 29).
For the horizontal mounting of extensions with compression loads, please take the following conditions into account: The Hertzian stress of the balls in no longer effective due to the expansion of the rail profile; the nominal tension tolerance of +0.5 mm is eliminated due to the installation configuration. Both the above mentioned conditions contribute to a significant reduction of the axial load capacity.
Horizontally-mounted rails (axial load) also determine a considerably higher deflection of the extended tips if compared to traditionally vertically-mounted rails (radial load).

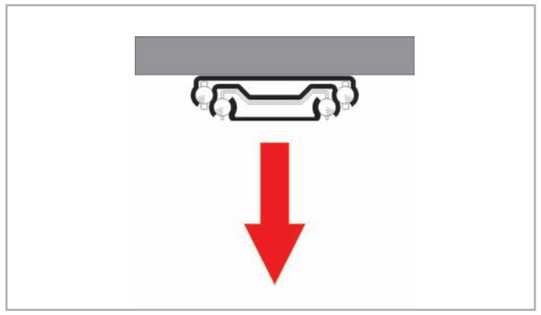

Fig. 28

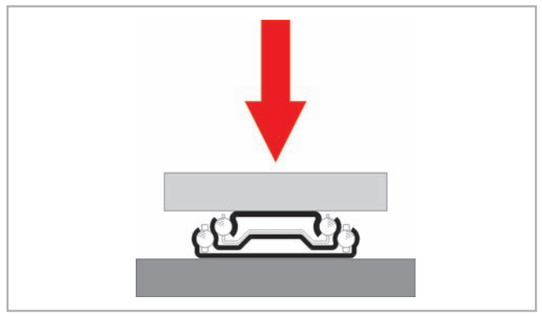

Fig. 29

DRX/DRS installation

- During installation care must be taken that the movable elements are assembled as in the figure; i.e. as the lower rail. The opposite upside-down assembly negatively affects the function.
- Internal stops are used to stop the unloaded slider and the ball cage. Please use external stops as end stops for a loaded system.
- To achieve optimum running properties, high service life and rigidity, it is necessary to fix the telescopic rails with all accessible holes on a rigid and level surface.
- Please observe the parallelism of the installation surfaces. The fixed and movable rails fit to the rigid assembly construction.

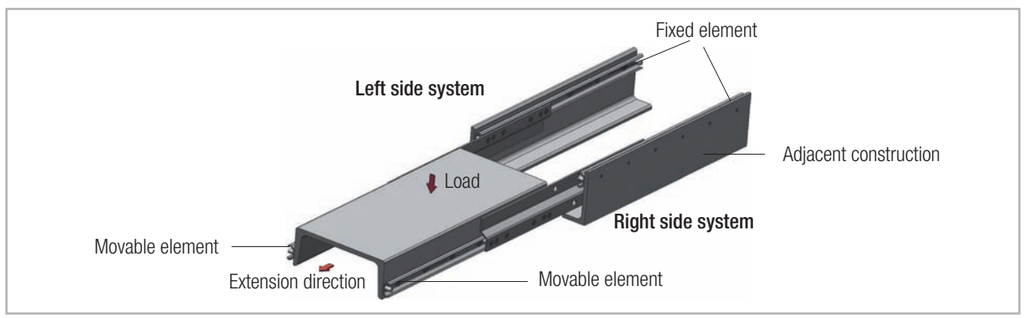

Fig. 30

Ordering key

Light Rail

LFS	58-	400	SC
			Automatic retraction only in LFS 58 SC *see pg. LR-9*
		Rail length in mm *see pg. LR-6*	
	Size *see pg. LR-6*		
Rail type *see pg. LR-6*			

Ordering example: LFS58-0400SC

Notes on ordering: The rail lengths are always indicated as 4 digits with 0 prefixes

Notes

Guides suitable for all applications

Railway

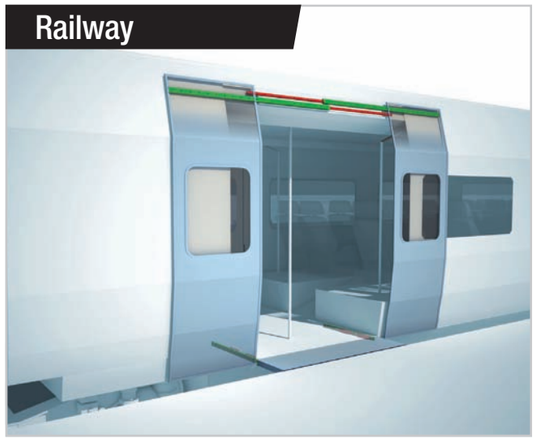

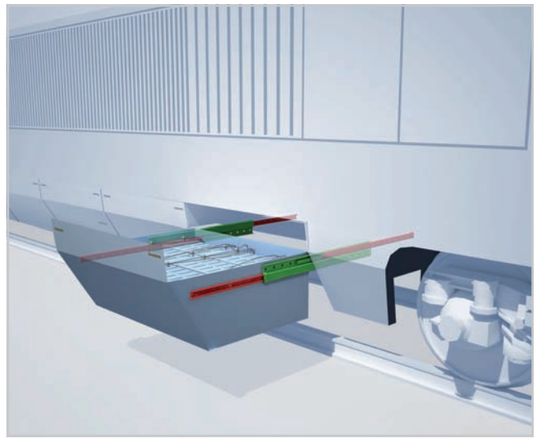

Aerospace

Medical

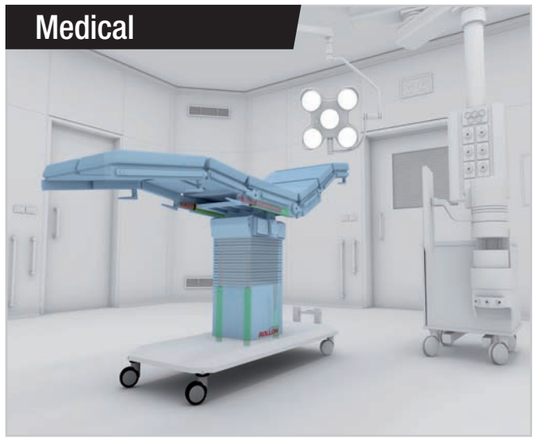

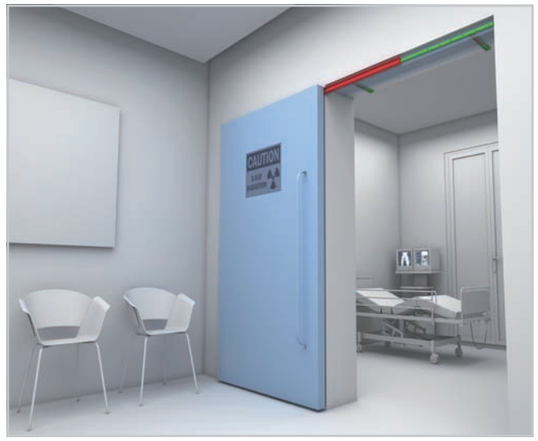

Special Vehicles

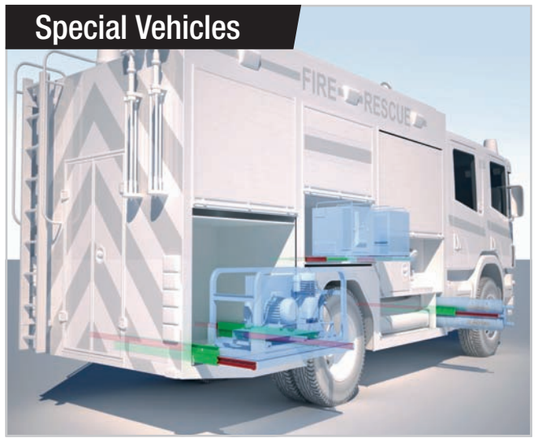

Logistics

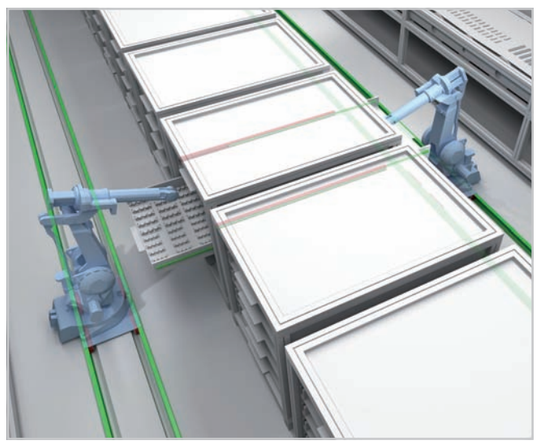

Industrial

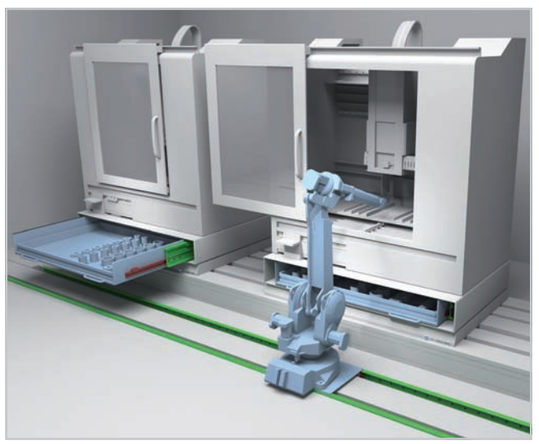

ROLLON®
LinearEvolution

ROLLON S.p.A. - ITALY

Via Trieste 26
I-20871 Vimercate (MB)
Phone: (+39) 039 62 59 1
www.rollon.it - infocom@rollon.it

Branches:

ROLLON GmbH - GERMANY

Bonner Strasse 317-319
D-40589 Düsseldorf
Phone: (+49) 211 95 747 0
www.rollon.de - info@rollon.de

ROLLON B.V. - NETHERLANDS

Ringbaan Zuid 8
6905 DB Zevenaar
Phone: (+31) 316 581 999
www.rollon.nl - info@rollon.nl

ROLLON S.A.R.L. - FRANCE

Les Jardins d'Eole, 2 allée des Séquoias
F-69760 Limonest
Phone: (+33) (0) 4 74 71 93 30
www.rollon.fr - infocom@rollon.fr

ROLLON Corporation - USA

101 Bilby Road. Suite B
Hackettstown, NJ 07840
Phone: (+1) 973 300 5492
www.rolloncorp.com - info@rolloncorp.com

ROLLON Ltd - CHINA

No. 16 Jin Wen Road,
China, Shanghai, 201323
Phone: +86 21 5811 8288
www.rollon.cn.com - info@rollon.cn.com

ROLLON India Pvt. Ltd. - INDIA

1st floor, Regus Gem Business Centre, 26/1
Hosur Road, Bommanahalli, Bangalore 560068
Phone: (+91) 80 67027066
www.rollonindia.in - info@rollonindia.in

ROLLON - JAPAN

3F Shiodome Building, 1-2-20 Kaigan, Minato-ku,
Tokyo 105-0022 Japan
Phone +81 3 6721 8487
www.rollon.jp - info@rollon.jp

Rep. Offices:

ROLLON S.p.A. - RUSSIA

117105, Moscow, Varshavskoye
shosse 17, building 1
Phone: +7 (495) 508-10-70
www.rollon.ru - info@rollon.ru

ROLLON Ltd - UK

The Works 6 West Street Olney
Buckinghamshire, United Kingdom, MK46 5 HR
Phone: +44 (0) 1234964024
www.rollon.uk.com - info@rollon.uk.com

Regional Manager:

ROLLON - SOUTH AMERICA

R. Joaquim Floriano, 397, 2o. andar
Itaim Bibi - 04534-011, São Paulo, BRASIL
Phone: +55 (11) 3198 3645
www.rollonbrasil.com.br - info@rollonbrasil.com

Consult the other ranges of products

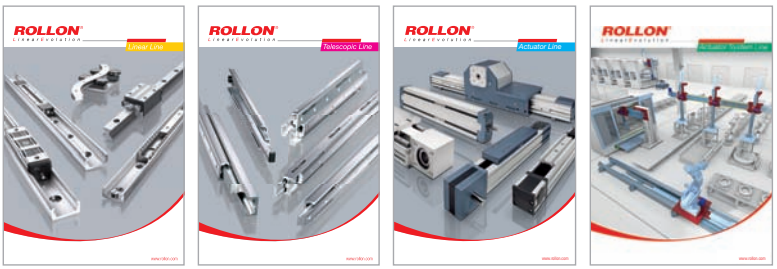

Distributor

www.linejnye.ru
e-mail: linejnye@mail.ru
Тел. (499) 703-15-70
Москва

All addresses of our global sales partners can also be found at www.rollon.com

The content of this document and its use are subject to the general terms of sale of ROLLON available on the web site www.rollon.com
Changes and errors expected. The text and images may be used only with our permission.